Cisco Reader Comment Card

General Information

1 Years of networking experience _____ Years of experience with Cisco products _____

2 I have these network types: ☐ LAN ☐ Backbone ☐ WAN
☐ Other: _____

3 I have these Cisco products: ☐ Switches ☐ Routers
☐ Other: Specify model(s) _____

4 I perform these types of tasks: ☐ H/W Install and/or Maintenance ☐ S/W Config
☐ Network Management ☐ Other: _____

5 I use these types of documentation: ☐ H/W Install ☐ H/W Config ☐ S/W Config
☐ Command Reference ☐ Quick Reference ☐ Release Notes ☐ Online Help
☐ Other: _____

6 I access this information through: ____% Cisco Connection Online (CCO) ____% CD-ROM
____% Printed docs ____% Other: _____

7 Which method do you prefer? _____

8 I use the following three product features the most:

Document Information

Document Title: Cisco MGX 8250 Multiservice Gateway Installation and Configuration

Part Number: 78-10924-01 S/W Release: 1.1.20

On a scale of 1–5 (5 being the best) please let us know how we rate in the following areas:

_____ The document was written at my technical level of understanding.

_____ The information was accurate.

_____ The document was complete.

_____ The information I wanted was easy to find.

_____ The information was well organized.

_____ The information I found was useful to my job.

Please comment on our lowest score(s):

Mailing Information

Company Name Date

Contact Name Job Title

Mailing Address

City State/Province ZIP/Postal Code

Country Phone ( ) Extension

Fax ( ) E-mail

Can we contact you further concerning our documentation? ☐ Yes ☐ No

You can also send us your comments by e-mail to **bug-doc@cisco.com**, or fax your comments to us at **(408) 527-8089**.

NO POSTAGE
NECESSARY
IF MAILED
IN THE
UNITED STATES

BUSINESS REPLY MAIL

FIRST-CLASS MAIL PERMIT NO. 4631 SAN JOSE CA

POSTAGE WILL BE PAID BY ADDRESSEE

ATTN DOCUMENT RESOURCE CONNECTION
CISCO SYSTEMS INC
170 WEST TASMAN DRIVE
SAN JOSE CA 95134-9883

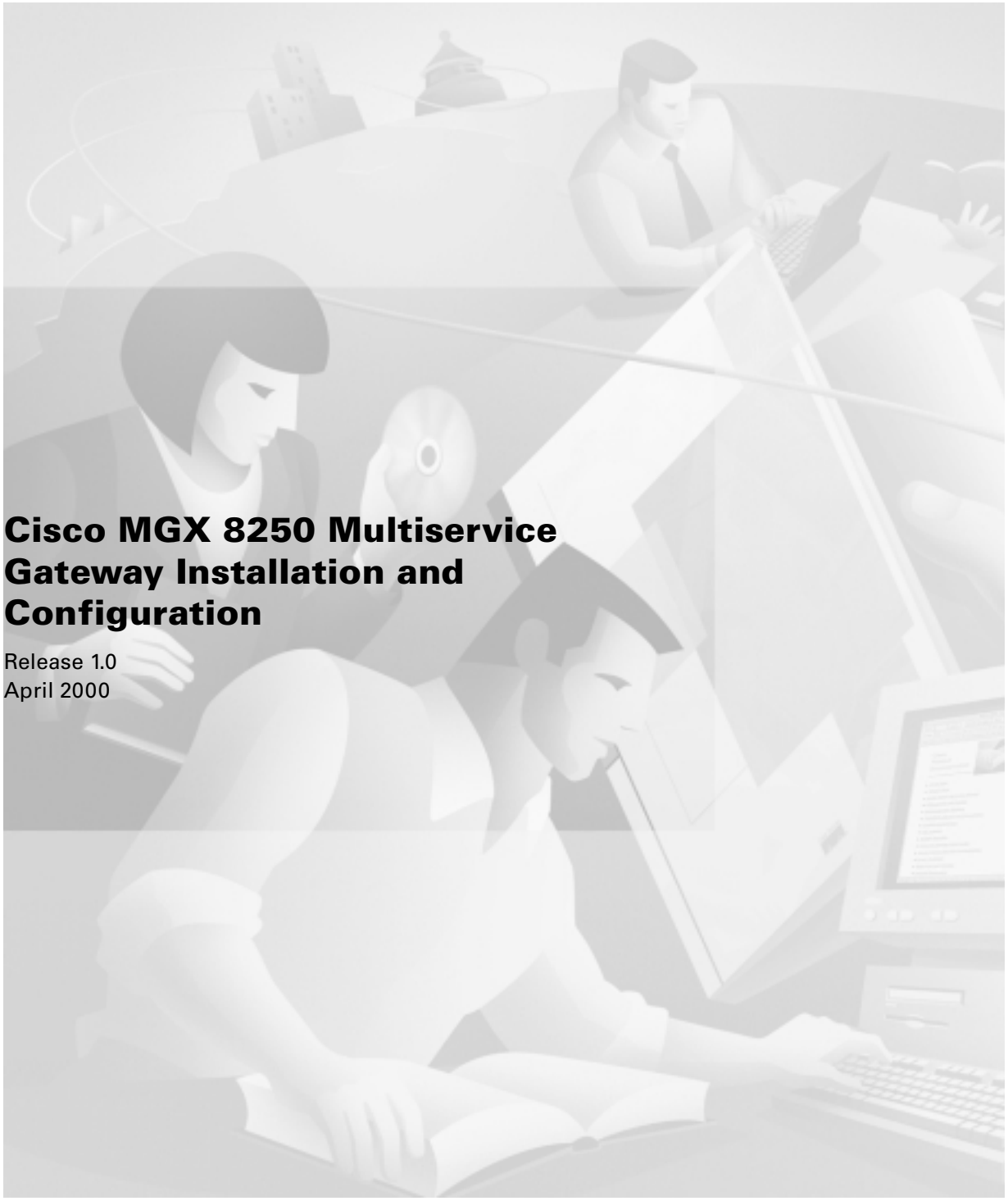

Cisco MGX 8250 Multiservice Gateway Installation and Configuration

Release 1.0
April 2000

Corporate Headquarters
Cisco Systems, Inc.
170 West Tasman Drive
San Jose, CA 95134-1706
USA
http://www.cisco.com
Tel: 408 526-4000
800 553-NETS (6387)
Fax: 408 526-4100

Customer Order Number: DOC-7810924=
Text Part Number: 78-10924-01

THE SPECIFICATIONS AND INFORMATION REGARDING THE PRODUCTS IN THIS MANUAL ARE SUBJECT TO CHANGE WITHOUT NOTICE. ALL STATEMENTS, INFORMATION, AND RECOMMENDATIONS IN THIS MANUAL ARE BELIEVED TO BE ACCURATE BUT ARE PRESENTED WITHOUT WARRANTY OF ANY KIND, EXPRESS OR IMPLIED. USERS MUST TAKE FULL RESPONSIBILITY FOR THEIR APPLICATION OF ANY PRODUCTS.

THE SOFTWARE LICENSE AND LIMITED WARRANTY FOR THE ACCOMPANYING PRODUCT ARE SET FORTH IN THE INFORMATION PACKET THAT SHIPPED WITH THE PRODUCT AND ARE INCORPORATED HEREIN BY THIS REFERENCE. IF YOU ARE UNABLE TO LOCATE THE SOFTWARE LICENSE OR LIMITED WARRANTY, CONTACT YOUR CISCO REPRESENTATIVE FOR A COPY.

The following information is for FCC compliance of Class A devices: This equipment has been tested and found to comply with the limits for a Class A digital device, pursuant to part 15 of the FCC rules. These limits are designed to provide reasonable protection against harmful interference when the equipment is operated in a commercial environment. This equipment generates, uses, and can radiate radio-frequency energy and, if not installed and used in accordance with the instruction manual, may cause harmful interference to radio communications. Operation of this equipment in a residential area is likely to cause harmful interference, in which case users will be required to correct the interference at their own expense.

The following information is for FCC compliance of Class B devices: The equipment described in this manual generates and may radiate radio-frequency energy. If it is not installed in accordance with Cisco's installation instructions, it may cause interference with radio and television reception. This equipment has been tested and found to comply with the limits for a Class B digital device in accordance with the specifications in part 15 of the FCC rules. These specifications are designed to provide reasonable protection against such interference in a residential installation. However, there is no guarantee that interference will not occur in a particular installation.

Modifying the equipment without Cisco's written authorization may result in the equipment no longer complying with FCC requirements for Class A or Class B digital devices. In that event, your right to use the equipment may be limited by FCC regulations, and you may be required to correct any interference to radio or television communications at your own expense.

You can determine whether your equipment is causing interference by turning it off. If the interference stops, it was probably caused by the Cisco equipment or one of its peripheral devices. If the equipment causes interference to radio or television reception, try to correct the interference by using one or more of the following measures:

• Turn the television or radio antenna until the interference stops.

• Move the equipment to one side or the other of the television or radio.

• Move the equipment farther away from the television or radio.

• Plug the equipment into an outlet that is on a different circuit from the television or radio. (That is, make certain the equipment and the television or radio are on circuits controlled by different circuit breakers or fuses.)

Modifications to this product not authorized by Cisco Systems, Inc. could void the FCC approval and negate your authority to operate the product.

The Cisco implementation of TCP header compression is an adaptation of a program developed by the University of California, Berkeley (UCB) as part of UCB's public domain version of the UNIX operating system. All rights reserved. Copyright © 1981, Regents of the University of California.

NOTWITHSTANDING ANY OTHER WARRANTY HEREIN, ALL DOCUMENT FILES AND SOFTWARE OF THESE SUPPLIERS ARE PROVIDED "AS IS" WITH ALL FAULTS. CISCO AND THE ABOVE-NAMED SUPPLIERS DISCLAIM ALL WARRANTIES, EXPRESSED OR IMPLIED, INCLUDING, WITHOUT LIMITATION, THOSE OF MERCHANTABILITY, FITNESS FOR A PARTICULAR PURPOSE AND NONINFRINGEMENT OR ARISING FROM A COURSE OF DEALING, USAGE, OR TRADE PRACTICE.

IN NO EVENT SHALL CISCO OR ITS SUPPLIERS BE LIABLE FOR ANY INDIRECT, SPECIAL, CONSEQUENTIAL, OR INCIDENTAL DAMAGES, INCLUDING, WITHOUT LIMITATION, LOST PROFITS OR LOSS OR DAMAGE TO DATA ARISING OUT OF THE USE OR INABILITY TO USE THIS MANUAL, EVEN IF CISCO OR ITS SUPPLIERS HAVE BEEN ADVISED OF THE POSSIBILITY OF SUCH DAMAGES.

Access Registrar, AccessPath, Any to Any, AtmDirector, Browse with Me, CCDA, CCDE, CCDP, CCIE, CCNA, CCNP, CCSI, CD-PAC, the Cisco logo, Cisco Certified Internetwork Expert logo, *CiscoLink*, the Cisco Management Connection logo, the Cisco Net*Works* logo, the Cisco Powered Network logo, Cisco Systems Capital, the Cisco Systems Capital logo, Cisco Systems Networking Academy, the Cisco Systems Networking Academy logo, the Cisco Technologies logo, ConnectWay, Fast Step, FireRunner, Follow Me Browsing, FormShare, GigaStack, IGX, Intelligence in the Optical Core, Internet Quotient, IP/VC, Kernel Proxy, MGX, Natural Network Viewer, NetSonar, Network Registrar, the Networkers logo, *Packet*, PIX, Point and Click Internetworking, Policy Builder, Precept, RateMUX, ScriptShare, Secure Script, ServiceWay, Shop with Me, SlideCast, SMARTnet, SVX, *The Cell*, TrafficDirector, TransPath, ViewRunner, Virtual Loop Carrier System, Virtual Voice Line, VisionWay, VlanDirector, Voice LAN, Wavelength Router, Workgroup Director, and Workgroup Stack are trademarks; Changing the Way We Work, Live, Play, and Learn, Empowering the Internet Generation, The Internet Economy, and The New Internet Economy are service marks; and ASIST, BPX, Catalyst, Cisco, Cisco IOS, the Cisco IOS logo, Cisco Systems, the Cisco Systems logo, the Cisco Systems Cisco Press logo, Enterprise/Solver, EtherChannel, EtherSwitch, FastHub, FastLink, FastPAD, FastSwitch, GeoTel, IOS, IP/TV, IPX, LightStream, LightSwitch, MICA, NetRanger, Post-Routing, Pre-Routing, Registrar, StrataView Plus, Stratm, TeleRouter, and VCO are registered trademarks of Cisco Systems, Inc. or its affiliates in the U.S. and certain other countries. All other trademarks mentioned in this document are the property of their respective owners. The use of the word partner does not imply a partnership relationship between Cisco and any of its resellers. (0003R)

Cisco MGX 8250 Multiservice Gateway Installation and Configuration
Copyright © 2000, Cisco Systems, Inc.
All rights reserved. Printed in USA.

CONTENTS

Preface xix

Objectives xix

Audience xix

Organization xx

Related Documentation xx

Conventions xxi

CHAPTER 1 **Regulatory Compliance and Safety Information for the MGX 8250 Switch** 1-1

Safety Recommendations 1-1

Maintaining Safety With Electricity 1-2

Warning Definition 1-3

Product Disposal Warning 1-4

Lightning Activity Warning 1-5

Jewelry Removal Warning 1-6

Power Supply Warning 1-7

Power Supply Disconnection Warning 1-8

Power Disconnection Warning 1-10

Grounded Equipment Warning 1-10

Installation Warning 1-12

Class 1 Laser Product Warning 1-12

Laser Beam Warning 1-13

CHAPTER 2 **Introducing the MGX 8250 Switch** 2-1

MGX 8250 System Overview 2-2

The Applications of the MGX 8250 Switch 2-2

Universal Edge Architecture 2-2

Standards-Based Conversion to ATM 2-3

MGX 8250 Enclosure and Power 2-3

MGX 8250 Cards 2-3

MGX 8250 Management 2-5

CHAPTER 3 **Site Preparation** 3-1

Parts Checklist 3-1
Card Slot Locations 3-1
Site Preparation 3-2
Seismic Considerations 3-3
Power and Grounding 3-3
AC-Power Circuit Breakers 3-3
DC-Power Circuit Breakers 3-3
Electrical Power for AC-Powered Switches 3-3
Electrical Power for DC-Powered Switches 3-5
Bonding and Grounding 3-6
Wiring a Mixed Ground System with Redundant Supplies 3-7
Conductor Characteristics for Carrying Current and Ensuring Low Voltage Drops 3-8
Seismic Anchoring for a Cisco Rack 3-9
Making the Frame Bonding (Ground) Connection 3-11
Making Cisco Cabinet Ground Connections 3-12
Using the Electrostatic Wrist Strap 3-14
Co-Locating Cisco Units in the Same Rack 3-14

CHAPTER 4 **Enclosure and Card Installation** 4-1

Introductory Information 4-1
Installation Tools 4-2
Mounting Rails for the Enclosure Modules 4-2
Considerations for Mounting the MGX 8250 Modules 4-3
Sequence for Installing the Switch 4-4
Stacking Order for Enclosure Modules 4-4
Removing a Front Card 4-5
Removing a Back Card 4-6
Removing a 220 VAC Power Supply 4-6
Installing the Enclosure 4-8
Installing the Cable Manager 4-10
Installing the Fan Power Cabling 4-11
Installing the System Power Cabling 4-14
Swapping a Primary or Redundant DC PEM With Power On 4-17
Installing 220 VAC Power Supplies 4-18

Connecting 220 VAC Power to the Switch **4-18**
Installing 110 VAC Power Supplies **4-19**
Connecting DC Power to the Switch **4-19**
MGX 8250 with 110 VAC Power Supply **4-21**
Configuration Limitations **4-21**
Adding and Removing Cards to 110 VAC Switch **4-22**
Removing 110 VAC Power Supply **4-22**
Replacing 110 VAC Power Supply **4-23**
Installing the Fan Power Cable **4-23**
MGX 8250 Low-Profile System with DC Power Supply **4-24**
Configuration Limitations **4-24**
Adding and Removing Cards in the MGX 8250 Low Profile DC Version **4-25**
Installing the Cards **4-26**
Installing a Front Card **4-27**
Installing a Back Card **4-27**
Redundancy for Service Modules **4-28**
1:1 Redundancy **4-28**
Hot Standby **4-28**
1:N Redundancy **4-28**
Processor Switching Module **4-29**
PXM Front Card **4-29**
PXM User Interface Back Card **4-30**
Making External Clock Connections **4-31**
Alarm Output Connection **4-32**
SMFLR-1-622 Back Card **4-32**
SMFIR-1-622 Back Card **4-33**
SMF-155 Back Card **4-34**
BNC-2T3 Back Card **4-35**
BNC-2E3 Back Card **4-36**
ATM UNI Service Module **4-36**
AUSM Front Card **4-37**
Back Cards for the AUSM/B **4-39**
Redundancy Support for the AUSM **4-39**
Frame Service Modules **4-42**
Very High Speed Frame Service Modules **4-42**

Four-Port FRSM for V.35 or X.21 **4-48**
Eight-Port FRSM With T1 or E1 **4-51**
Redundancy for Frame Service Modules **4-54**
Hot Standby **4-55**
1:1 Redundancy **4-55**
1:N Redundancy **4-55**
Circuit Emulation Service Module **4-55**
Redundancy for the 8-Port CESM **4-55**
LED Indicators for the 8-Port CESM **4-56**
Service Resource Module **4-59**
General Installation Requirements for the MGX-SRM-3T3/B **4-60**
Bulk Distribution and Redundancy Support **4-60**
Routing Data Cables **4-61**
Initial Start-up of the MGX 8250 Switch **4-62**
Converting Single-Height Slots to Double-Height Slots **4-63**

CHAPTER 5 **Configuring the MGX 8250 Switch** **5-1**
Bringing Up an MGX 8250 Switch **5-1**
Switch Access Ports **5-2**
Initial Switch Bring-Up **5-3**
Bringing Up a PXM with No Runtime Firmware **5-3**
Configuring Switch-Level Parameters **5-5**
Downloading Firmware to a Service Module **5-10**

CHAPTER 6 **Card and Service Configuration** **6-1**
Tasks for Configuring Cards and Services **6-1**
Modifying the Resource Partitioning **6-2**
Sequence of Configuration Tasks **6-2**
Rules for Adding Connections **6-2**
Rules for Adding a DAX Connection **6-3**
Rules for Adding Three-Segment Connections **6-3**
Rules for Adding Management Connections **6-4**
The Processor Switching Module **6-4**
Configuring Synchronization for the Switch **6-5**
Configuring Card-Level Parameters, Lines, and Ports **6-6**
Automatic Protection Switching on the PXM1 **6-8**

Adding Connections on a PXM1 in a Stand-Alone Switch **6-9**
ATM Universal Service Module **6-12**
Using the CLI to Configure the Card, Lines, and Ports **6-13**
Using the CLI to Configure Inverse Multiplexing **6-14**
Adding and Configuring Connections on the AUSM/B **6-15**
BPX 8600-to-BPX 8600 Segment **6-19**
Frame Service Module Features **6-20**
Introduction **6-20**
Types of Frame Service Modules **6-20**
Very High Speed Frame Service Modules **6-20**
Eight-Port Channelized and Unchannelized Frame Service Modules for T1 and E1 **6-21**
Four-Port Unchannelized Frame Service Module for V.35 or X.21 **6-21**
Frame Service Module Features **6-21**
MGX-FRSM-2CT3 Features **6-22**
MGX-FRSM-2T3E3 Features **6-23**
MGX-FRSM-HS2 Features **6-23**
MGX-FRSM-HS1/B Features **6-23**
Eight-Port FRSM Features **6-24**
Description of Connection Types on the FRSM **6-24**
Frame Relay–to-ATM Network Interworking **6-24**
Congestion Indication for NIW Connections **6-25**
PVC Status Management **6-25**
Frame Relay–to-ATM Service Interworking **6-26**
Cell Loss Priority **6-26**
Congestion Indication **6-27**
Command and Response Mapping **6-27**
Translation and Transparent Modes **6-27**
Frame Forwarding **6-27**
ATM/Frame-to-User Network Interface **6-28**
Loss Priority Indication **6-28**
Congestion Indication **6-28**
Configuring Frame Relay Service **6-28**
Configuring the FRSM Cards, Lines, and Ports **6-28**
Adding a Frame Relay Connection **6-32**
Establishing the BPX 8600 to BPX 8600 Series Segment **6-35**

Test Commands for the FRSMs **6-36**
Support for Alarm Reporting **6-37**
Bit Error Rate Testing on an Unchannelized T3 or E3 FRSM **6-37**
Circuit Emulation Service Module for T3 and E3 **6-37**
Features **6-38**
Cell Delay Treatment **6-38**
Error and Alarm Response **6-38**
Configuring Service on a T3 or E3 CESM **6-39**
Configuring the Card, Lines, and Ports **6-39**
Adding and Modifying Connections **6-40**
Bit Error Rate Testing on a T3 or E3 CESM **6-42**
Eight-Port Circuit Emulation Service Modules **6-42**
Structured Data Transfer **6-43**
Unstructured Data Transfer **6-43**
Cell Delay Treatment **6-43**
Redundancy Support for the Eight-Port CESM **6-44**
Error and Alarm Response **6-44**
Configuring Service on an Eight-Port CESM **6-44**
Configuring the Card, Lines, and Ports **6-45**
Configuring Bulk Distribution and Redundancy **6-46**
Adding and Modifying Connections **6-46**
Service Resource Module **6-48**
Configuring Card and Line Parameters **6-49**
Bulk Distribution for T1 Service **6-49**
Redundancy Support by the MGX-SRM-3T3/B **6-50**
Configuring Redundancy Through the Redundancy Bus **6-51**
Configuring Redundancy Through the Distribution Bus **6-51**
Bit Error Rate Testing Through an MGX-SRM-3T3 **6-52**
Pattern Test Options **6-55**
Loopback Test Options **6-56**

APPENDIX A **System Specifications A-1**
Enclosure and System Power Specifications **A-1**
Physical and Electrical Characteristics for Cards **A-3**
Electromagnetic Compatibility and Immunity **A-4**
Processor Switching Module Specifications **A-6**

MGX-AUSM/B-8T1E1 Interface Characteristics **A-8**
MGX-FRSM-2CT3 Specifications **A-11**
MGX-FRSM-2CT3 Framer **A-12**
MGX-FRSM-2CT3 Line Alarms **A-12**
MGX-FRSM T3 and E3 Specifications **A-12**
MGX-FRSM T3 Line **A-13**
T3 Framer Level **A-14**
MGX-FRSM E3 Line **A-14**
E3 Framer Level **A-14**
MGX-FRSM T3 and E3 Line Alarms **A-14**
Statistics and Counter Specifications **A-15**
MGX-FRSM-HS2 Specifications **A-15**
Counters and Statistics for FRSM-VHS Cards **A-16**
MGX-FRSM-8T1 Specification **A-18**
MGX-FRSM-8E1 Specification **A-22**
MGX-SRM-3T3/B Specification **A-25**
Circuit Emulation Service for T3 and E3 **A-26**
Circuit Emulation Service Module for T1 Operation **A-27**
Circuit Emulation Service Module for E1 Operation **A-28**

APPENDIX **B** **Cabling Summary** **B-1**
Introduction **B-1**
T3 Trunk Cabling **B-1**
Frame Relay Cabling **B-1**
T1 Cabling **B-2**
E1 Cabling **B-2**
BNC Connector **B-2**
DB-15 Connector **B-3**
12IN1-S4 V.35/X.21 Back Card **B-3**
HSSI Port Connectors **B-5**
Cabling for RJ-48 Connectors on T1 and E1 Ports **B-6**
DC Power Cabling **B-7**
220VAC Power Cabling **B-8**
110VAC Power Cabling **B-8**
Control and Clock Cabling **B-8**
Maintenance and Control Ports **B-8**

Modem Cable **B-9**

External Clock Input Cabling **B-9**

T1/E1 Clock Cabling **B-10**

E1 Clock Cabling **B-10**

External Alarm Cabling **B-11**

Standard MGX 8250 Cables **B-11**

Redundancy Y-Cable **B-12**

APPENDIX C **Commands That Apply to the MGX 8250 Switch C-1**

addcon (ATM) **C-1**

addshelf **C-15**

dspnode (LSC) **C-20**

dspnode **C-23**

dsptrks **C-25**

INDEX

FIGURES

Figure 2-1 MGX 8250 Switch **2-1**

Figure 3-1 Electrical Relationship of AC Plug Wiring **3-5**

Figure 3-2 Mixed Grounding System **3-7**

Figure 3-3 Stability Plate Dimensions **3-10**

Figure 3-4 Installing a Cisco Cabinet Over the Stability Plate **3-11**

Figure 3-5 Frame Bonding Connection in Cisco-Supplied Rack **3-13**

Figure 4-1 19-inch Rack Mounted DC-Powered MGX 8250 Switch **4-2**

Figure 4-2 Mounting Rail Distances **4-3**

Figure 4-3 Component Locations in a 220 VAC-Powered MGX 8250 Switch **4-5**

Figure 4-4 Front Card Insertion/Extractor Latch **4-6**

Figure 4-5 Removing a 220 VAC Power Supply **4-7**

Figure 4-6 AC Power Supply **4-7**

Figure 4-7 Optional 220 VAC Power Tray **4-8**

Figure 4-8 DC-PEM **4-9**

Figure 4-9 DC-PEMs Installed in Back of the Air Intake Module **4-9**

Figure 4-10 Air Intake Module **4-9**

Figure 4-11 Fan Tray **4-10**

Figure 4-12 Cable Management Assembly at Back Enclosure **4-11**

Figure 4-13 Fan Power Cable **4-12**

Figure 4-14 Access for Fan Power at the Backplane, 220 VAC-Powered Switch **4-13**

Figure 4-15 Access for Fan Power at the Backplane, DC-Powered Switch **4-14**

Figure 4-16 Cable Assembly for System Power **4-15**

Figure 4-17 Access for System Power at the Backplane, 220 VAC-Powered Switch **4-15**

Figure 4-18 Access for System Power at the Backplane, DC-Powered Switch **4-16**

Figure 4-19 DC-PEM **4-20**

Figure 4-20 Placement of DC Wiring Lugs on the DC-PEM **4-21**

Figure 4-21 MGX 8250 with 110 VAC Power Supply **4-22**

Figure 4-22 Removing 110 VAC Power Supply **4-23**

Figure 4-23 Installing Fan Power Cable **4-24**

Figure 4-24 MGX 8250 Low-Profile DC Version, Front View **4-25**

Figure 4-25 MGX 8250 Low-Profile DC System Power Connections **4-26**

Figure 4-26 PXM Front Card **4-30**
Figure 4-27 User Interface Card for PXM **4-31**
Figure 4-28 OC-12 Long Reach Back Card **4-32**
Figure 4-29 Intermediate Reach OC-12 Back Card **4-33**
Figure 4-30 Four-Port OC-3 Back Card **4-34**
Figure 4-31 BNC-2T3 **4-35**
Figure 4-32 BNC-2E3 **4-36**
Figure 4-33 AUSM/B-8T1 or AUSM/B-8E1 Front Card **4-38**
Figure 4-34 Standard RJ-48 Back Card for the MGX-AUSM-8T1/B **4-40**
Figure 4-35 Standard RJ-48 and SMB Back Cards for the MGX-AUSM-8E1/B **4-41**
Figure 4-36 MGX-FRSM-2CT3 **4-43**
Figure 4-37 MGX-FRSM-2T3E3 **4-44**
Figure 4-38 MGX-FRSM-HS2 **4-45**
Figure 4-39 BNC-2T3 **4-46**
Figure 4-40 BNC-2E3 **4-47**
Figure 4-41 SCSI2-2HSSI **4-48**
Figure 4-42 MGX-FRSM-HS1/B Front Card Faceplate **4-49**
Figure 4-43 12IN1 S4 Back Card Faceplate **4-51**
Figure 4-44 MGX-FRSM-8T1 **4-52**
Figure 4-45 Standard RJ-48 Back Card for the MGX-FRSM-8T1 **4-53**
Figure 4-46 Standard RJ-48 and SMB Back Cards for the MGX-FRSM-8E **4-54**
Figure 4-47 Front Cards for the 8-Port CESM **4-56**
Figure 4-48 Standard RJ48-8T1 Back Card **4-58**
Figure 4-49 Standard RJ48-8E1 and SMB-8E1 Back Cards **4-59**
Figure 4-50 MGX-SRM-3T3/B Card Set **4-61**
Figure 4-51 Routing Data Cables at the Cooling Assembly **4-62**
Figure 4-52 Front View of an AC-Powered Cisco MGX 8250 Switch **4-63**
Figure 4-53 Center Guide Module with Support Bracket **4-65**
Figure 4-54 Center Guide Module with Vertical Support Bracket **4-66**
Figure 5-1 Feeder Application **5-6**
Figure 5-2 Stand-Alone Application **5-7**
Figure 5-3 Bandwidth Concentration in Upper and Lower Bays **5-10**
Figure 6-1 Frame Relay Connection Through an MGX 8250–BPX 8600 Series Network **6-4**
Figure 6-2 BPX 8620 Network with NIW Connections **6-25**
Figure 6-3 BPX 8600 Series Network with SIW Connections **6-26**

Figure B-1 RJ-48 Connectors **B-7**
Figure B-2 DC Power Connections **B-7**
Figure B-3 Null Modem Cable **B-9**
Figure C-1 Prompt Sequence for a CBR Connection **C-2**
Figure C-2 Prompt Sequence for a VBR Connection **C-3**
Figure C-3 Prompt Sequence for an ATFR Connection **C-4**
Figure C-4 Prompt Sequence for a ATFST Connection **C-5**
Figure C-5 Prompt Sequence for an ABRSTD Connection **C-6**
Figure C-6 Prompt Sequence for ABRFST Connection **C-7**
Figure C-7 Prompt Sequence for a UBR Connection **C-7**

Table 2-1 Power Supply Options **2-3**
Table 3-1 110 VAC Power Module Output Power **3-4**
Table 3-2 110 VAC Power Cables **3-5**
Table 3-3 Ground Point Descriptions for Mixed Grounding **3-7**
Table 3-4 Wire Gauge for Current Loads Over Copper Wire Lengths **3-8**
Table 3-5 Resistance for Each Gauge of Copper Wire **3-9**
Table 4-1 Eight-Port AUSM/B LED Indicators **4-38**
Table 4-2 12IN1-S4 Back Card Cable Types **4-50**
Table 4-3 Cabling and Clock Sources for the MGX-FRSM-HS1/B **4-50**
Table 4-4 Cabling Types and Part Numbers X.21 and V.35 **4-50**
Table 4-5 LED Indicators for 8-Port CESM **4-57**
Table 6-1 Policing Definitions According to Policing and Connection Type **6-11**
Table 6-2 Supported Lines Rates on the MGX-FRSM-HS1/B **6-29**
Table 6-3 CESM Errors and Alarms **6-39**
Table 6-4 CESM Errors and Alarms **6-44**
Table 6-5 Pattern Test for AX-FRSM-8T1, AX-CESM-8T1, and MGX-FRSM-2CT3 **6-53**
Table 6-6 Loopback Test for AX-FRSM-8T1, AX-CESM-8T1, and MGX-FRSM-2CT3 **6-54**
Table 6-7 Pattern Test for AX-FRSM-8E1 and AX-CESM-8E1 **6-54**
Table 6-8 Loopback Test for AX-FRSM-8E1 and AX-CESM-8E1 **6-54**
Table 6-9 Pattern Test for MGX-AUSM-8T1 **6-54**
Table 6-10 Loopback Test for MGX-AUSM-8T1 **6-54**
Table 6-11 Pattern Test for MGX-AUSM-8E1 **6-54**
Table 6-12 Loopback Test for MGX-AUSM-8E1 **6-55**
Table A-1 Enclosure and Electrical Characteristics **A-2**
Table A-2 Physical Characteristics and Power Consumption by Card **A-3**
Table A-3 Electromagnetic Compatibility and Immunity **A-4**
Table A-4 PXM Specifications **A-6**
Table A-5 Physical Characteristics of the 8-Port MGX-AUSM/B **A-8**
Table A-6 T1 Interface Characteristics **A-9**
Table A-7 E1 Interface Characteristics **A-9**
Table A-8 ATM Interface Characteristics **A-10**

Table A-9 MGX-AUSM/B-8T1E1 Statistics and Counters **A-10**
Table A-10 Frame Relay Interface Standards **A-11**
Table A-11 MGX-FRSM-2CT3 Front Card Physical Characteristics **A-11**
Table A-12 MGX-FRSM-2CT3 Line Level **A-12**
Table A-13 Frame Relay Interface Standards **A-13**
Table A-14 MGX-FRSM-2T3E3 Front Card Physical Characteristics **A-13**
Table A-15 T3 Line Level **A-13**
Table A-16 E3 Line Level **A-14**
Table A-17 Frame Relay Interface Standards **A-15**
Table A-18 MGX-FRSM-HS2 Physical Characteristics **A-15**
Table A-19 MGX-FRSM-HS2 Line Characteristics **A-16**
Table A-20 Service-Related Statistics **A-17**
Table A-21 ATM Cell-Related Statistics **A-18**
Table A-22 Diagnostic-Related Statistics **A-18**
Table A-23 Troubleshooting-Related Statistics **A-18**
Table A-24 General Card Specifications **A-19**
Table A-25 System Interface **A-19**
Table A-26 Frame Relay Service With T1 Lines **A-19**
Table A-27 List of Counters **A-21**
Table A-28 System Interface **A-22**
Table A-29 General Card Specifications **A-22**
Table A-30 Frame Relay Service with E1 Lines **A-23**
Table A-31 List of Counters **A-24**
Table A-32 MGX-SRM-3T3/B Specifications **A-26**
Table A-33 CESM 8T1 Card Information **A-28**
Table A-34 CESM 8E1 Card Set Details **A-29**
Table B-1 Trunk Cables **B-1**
Table B-2 T3 Connector Pin Assignments **B-1**
Table B-3 T1 Trunk/Circuit Line Cabling Specification **B-2**
Table B-4 T1 Connector Pin Assignments **B-2**
Table B-5 E1 Trunk/Circuit Line Cabling Specification **B-2**
Table B-6 E1 Connector Pin Assignments (unbalanced) **B-3**
Table B-7 E1 Trunk/Circuit Line Cabling Specification **B-3**
Table B-8 E1 Connector Pin Assignments **B-3**
Table B-9 12IN1-S4 cable types **B-4**

Table B-10 V.35 signals **B-4**
Table B-11 X.21 Signals **B-4**
Table B-12 Cable Part Numbers for MGX-FRSM-HS1/BV **B-5**
Table B-13 Pinouts for SCSI-II Connector **B-5**
Table B-14 DC Power Wiring **B-7**
Table B-15 220VAC Power Cables **B-8**
Table B-16 110VAC Power Cables **B-8**
Table B-17 Maintenance and Control Port Cabling **B-9**
Table B-18 Maintenance and Control Port Pin Assignments **B-9**
Table B-19 External Clock Cabling—T3E3-D or SMF-155 **B-10**
Table B-20 T1 Connector Pin Assignments for EXT.TMG **B-10**
Table B-21 E1 Clock Cabling—T3E3-B **B-10**
Table B-22 E1 Connector Pin Assignments for EXT.TMG (unbalanced) **B-10**
Table B-23 External Alarm Cabling **B-11**
Table B-24 Network Alarm Pin Assignments **B-11**
Table B-25 Standard Cables Available from Cisco **B-12**
Table B-26 Y-Cable Product Names for Applicable Cards **B-12**
Table C-1 addcon–Parameters **C-8**
Table C-2 addcon–Parameter Defaults and Ranges **C-11**
Table C-3 Traffic Policing Definitions **C-13**
Table C-4 Addshelf–Label Switching Parameters **C-17**
Table C-5 Addshelf–Interface Shelf Parameters **C-18**

Preface

This preface describes the objectives, audience, organization, and conventions of the *Cisco MGX 8250 Multiservice Gateway Installation and Configuration* publication.

Cisco documentation and additional literature are available in a CD-ROM package, which ships with your product. The Documentation CD-ROM, a member of the Cisco Connection Family, is updated monthly. Therefore, it might be more current than printed documentation. To order additional copies of the Documentation CD-ROM, contact your local sales representative or call customer service. The CD-ROM package is available as a single package or as an annual subscription. You can also access Cisco documentation on the World Wide Web at http://www.cisco.com, http://www-china.cisco.com, or http://www-europe.cisco.com.

If you are reading Cisco product documentation on the World Wide Web, you can submit comments electronically. Click **Feedback** in the toolbar, select **Documentation**, and click **Enter the feedback form**. After you complete the form, click **Submit** to send it to Cisco. We appreciate your comments.

Objectives

This publication provides descriptions for installing and configuring the following MGX 8250 hardware:

- Enclosures
- Power sources (AC and DC)
- Controller cards (the CPU for the switch)
- Frame Relay interface cards
- ATM interface cards
- Trunk cards

Audience

The *Cisco MGX 8250 Multiservice Gateway Installation and Configuration* publication provides installers, operators, and network designers and managers with the necessary understanding to set up any applications of the MGX 8250 switches.

Organization

The major sections of this publication are as follows:

- Chapter 1, “Regulatory Compliance and Safety Information for the MGX 8250 Switch”
- Chapter 2, “Introducing the MGX 8250 Switch”
- Chapter 3, “Site Preparation”
- Chapter 4, “Enclosure and Card Installation”
- Chapter 5, “Configuring the MGX 8250 Switch”
- Chapter 6, “Card and Service Configuration”
- Appendix A, “System Specifications”
- Appendix B, “Cabling Summary”
- Appendix C, “Commands That Apply to the MGX 8250 Switch”

Related Documentation

MGX 8250 Release 1.0 Related Documentation	Documentation Description
Cisco MGX 8250 Multiservice Gateway Command Reference Release 1.0 *DOC-7810897=*	Provides detailed information on the general command line interface commands
Cisco MGX 8250 Error Messages Release 1.0 *DOC-7810923=*	Provides error message descriptions and recovery procedures.
Cisco BPX 8600 Series Installation and Configuration Release 9.2 DOC-786326=	Provides installation instructions for the BPX broadband switch.
Cisco BPX 8600 Series Reference Release 9.2 DOC-786325=	Provides a general description and technical details of the BPX broadband switch.
Cisco IGX 8400 Series Installation and Configuration Release 9.2 DOC-786723=	Provides installation instructions for the IGX multiband switch.
Cisco IGX 8400 Series Reference Release 9.2 DOC-786736=	Provides a general description and technical details of the IGX multiband switch.
Cisco WAN Switching Command Reference Release 9.2 DOC-786721=	Provides detailed information on the general command line interface commands.
Cisco WAN Switching SuperUser Command Reference Release 9.2 DOC-786722=	Provides detailed information on the command line interface commands requiring SuperUser access authorization.

WAN CiscoView for the MGX 8250 Multiservice Gateway Release 1.0 *DOC-7810925=*	Provides instructions for using WAN CiscoView for the MGX 8250 multiservice gateway.
WAN CiscoView for the IGX 8400 Switches Release 2.0 DOC-786541=	Provides instructions for using WAN CiscoView for the IGX 8400.
WAN CiscoView for the BPX 8600 Switches Release 2.0 DOC-786539=	Provides instructions for using WAN CiscoView for the BPX 8600.
Cisco WAN Manager Installation for Solaris Release 9.2 DOC-78=785875=	Provides procedures for installing Release 9.2 of the Cisco WAN Manager (CWM) network management system on Solaris systems.
Cisco WAN Manager Operations Release 9.2 DOC-785876=	Provides procedures for operating Release 9.2 of the Cisco WAN Manager (CWM) network management system.
Cisco WAN Manager SNMP Service Agent Release 9.2 DOC-785878=	Provides information about the Cisco WAN Manager Simple Network Management Protocol (SNMP) Service Agent components and capabilities.
Cisco WAN Manager Database Interface Release 9.2 DOC-785877=	Provides the information to gain direct access to the Cisco WAN Manager Informix OnLine database that is used to store information about the elements within your network.

Conventions

This publication uses the following conventions to convey instructions and information.

Command descriptions use these conventions:

- Commands and keywords are in **boldface**.
- Arguments for which you supply values are in *italics*.
- Required command arguments are inside angle brackets (< >).
- Optional command arguments are in square brackets ([ ]).
- Alternative keywords are separated by vertical bars (|).

Examples use these conventions:

- Terminal sessions and information the system displays are in `screen` font.
- Information you enter is in **`boldface screen`** font.
- Nonprinting characters, such as passwords, are in angle brackets (< >).
- Default responses to system prompts are in square brackets ([ ]).

Note Means *reader take note*. Notes contain helpful suggestions or references to materials not contained in this manual.

Caution Means *reader be careful*. In this situation, you might do something that could result in equipment damage or loss of data.

Warning **This warning symbol means *danger*. You are in a situation that could cause bodily injury. Before you work on any equipment, you must be aware of the hazards involved with electrical circuitry and familiar with standard practices for preventing accidents. (To see translated versions of this warning, refer to the *Regulatory Compliance and Safety Information* document that accompanied the product.)**

CHAPTER 1

Regulatory Compliance and Safety Information for the MGX 8250 Switch

This chapter provides regulatory compliance and safety information for the AC and DC-powered versions of the MGX 8250 switch.

Warning **Only trained service personnel should install the equipment.**

Warning **Read the installation instructions before you connect the equipment to its power source.**

The MGX 8250 AC-powered and MGX 8250 DC-powered systems are intended for installation in a RESTRICTED ACCESS LOCATION.

Safety Recommendations

The guidelines that follow help ensure your safety and protect the MGX 8250 equipment. The list of guidelines may not address all potentially hazardous situations in your working environment, so be alert, and exercise good judgement at all times.

The safety guidelines are:

- Keep the chassis area clear and dust-free before, during, and after installation.
- Keep tools away from walk areas where people could fall over them.
- Do not wear loose clothing or jewelry, such as rings, bracelets, or chains, which may become caught in the chassis.
- Wear safety glasses if you are working under any conditions that may be hazardous to your eyes.
- Do not perform any actions that create a potential hazard to people or make the equipment unsafe.
- Never attempt to lift an object that is too heavy for one person to handle.

Maintaining Safety With Electricity

Warning **Before working on a chassis or working near power supplies, unplug the power cords on an AC-powered system. On a DC-powered system, disconnect the power at the circuit breakers.**

Follow these guidelines when working on equipment powered by electricity:

- Locate the emergency power-off switch for the room in which you are working. If an electrical accident occurs, you can quickly turn off the power.
- Do not work alone if potentially hazardous conditions exist anywhere in your workspace.
- Never assume that power is disconnected from a circuit: always check the circuit.
- Carefully look for possible hazards in your work area, such as moist floors, ungrounded power extension cords, or missing safety grounds.
- If an electrical accident occurs:
  - Use caution—do not let yourself become a victim.
  - Disconnect power from the system.
  - If possible, send another person to get medical aid. Otherwise, assess the condition of the victim then call for help.
- Use the MGX 8250 AC and MGX 8250 DC systems within their marked electrical ratings and product usage instructions.
- Install the MGX 8250 or MGC 8250 DC systems with the following local, national, or international electrical codes:
  - United States—National Fire Protection Association (NFPA70), United States National Electrical Code.
  - Canada—Canadian Electrical Code, Part 1, CSA C22.1.
  - Other countries—International Electromechanical Commission (IEC) 364, Part 1 through Part 7.
- MGX 8250 AC models are shipped with a 3-wire electrical cord with a grounding-type plug that fits only a grounding type power outlet. This is a safety feature that you should not circumvent. Equipment grounding should comply with local and national electrical codes.
- MGX 8250 DC models are equipped with DC power entry modules and require you to terminate the DC input wiring on a DC source capable of supplying at least 60 amps. A 60-amp circuit breaker is required at the 48 VDC facility power source. An easily accessible disconnect device should be incorporated into the facility wiring. Be sure to connect the grounding wire conduit to a solid earth ground. A closed loop ring is recommended to terminate the ground conductor at the ground stud.
- Other DC power guidelines are:
  - Only a DC power source that complies with the safety extra low voltage (SELV) requirements of UL 1950, CSA C22.2 No. 950-95, EN 60950 and IEC 950 can be connected to an MGX 8250 DC-input power entry module.
  - MGX 8250 DC which is equipped with DC power entry modules is intended only for installation in a restricted access location. In the United States, a restricted access area is in accordance with Articles 110-16, 110-17, and 110-18 of the National Electrical Code ANSI/NFPA 70.

Warning Definition

Warning Means danger. You are in a situation that could cause bodily injury. Before you work on any equipment, be aware of the hazards involved with electrical circuitry and be familiar with standard practices for preventing accidents.

Waarschuwing Dit waarschuwingssymbool betekent gevaar. U verkeert in een situatie die lichamelijk letsel kan veroorzaken. Voordat u aan enige apparatuur gaat werken, dient u zich bewust te zijn van de bij elektrische schakelingen betrokken risico's en dient u op de hoogte te zijn van standaard maatregelen om ongelukken te voorkomen.

Varoitus Tämä varoitusmerkki merkitsee vaaraa. Olet tilanteessa, joka voi johtaa ruumiinvammaan. Ennen kuin työskentelet minkään laitteiston parissa, ota selvää sähkökytkentöihin liittyvistä vaaroista ja tavanomaisista onnettomuuksien ehkäisykeinoista.

Attention Ce symbole d'avertissement indique un danger. Vous vous trouvez dans une situation pouvant causer des blessures ou des dommages corporels. Avant de travailler sur un équipement, soyez conscient des dangers posés par les circuits électriques et familiarisez-vous avec les procédures couramment utilisées pour éviter les accidents.

Warnung Dieses Warnsymbol bedeutet Gefahr. Sie befinden sich in einer Situation, die zu einer Körperverletzung führen könnte. Bevor Sie mit der Arbeit an irgendeinem Gerät beginnen, seien Sie sich der mit elektrischen Stromkreisen verbundenen Gefahren und der Standardpraktiken zur Vermeidung von Unfällen bewußt.

Avvertenza Questo simbolo di avvertenza indica un pericolo. La situazione potrebbe causare infortuni alle persone. Prima di lavorare su qualsiasi apparecchiatura, occorre conoscere i pericoli relativi ai circuiti elettrici ed essere al corrente delle pratiche standard per la prevenzione di incidenti.

Advarsel Dette varselsymbolet betyr fare. Du befinner deg i en situasjon som kan føre til personskade. Før du utfører arbeid på utstyr, må du vare oppmerksom på de faremomentene som elektriske kretser innebærer, samt gjøre deg kjent med vanlig praksis når det gjelder å unngå ulykker.

Aviso Este símbolo de aviso indica perigo. Encontra-se numa situação que lhe poderá causar danos físicos. Antes de começar a trabalhar com qualquer equipamento, familiarize-se com os perigos relacionados com circuitos eléctricos, e com quaisquer práticas comuns que possam prevenir possíveis acidentes.

¡Atención! Este símbolo de aviso significa peligro. Existe riesgo para su integridad física. Antes de manipular cualquier equipo, considerar los riesgos que entraña la corriente eléctrica y familiarizarse con los procedimientos estándar de prevención de accidentes.

Varning! Denna varningssymbol signalerar fara. Du befinner dig i en situation som kan leda till personskada. Innan du utför arbete på någon utrustning måste du vara medveten om farorna med elkretsar och känna till vanligt förfarande för att förebygga skador.

Product Disposal Warning

Warning	**Ultimate disposal of this product should be handled according to all national laws and regulations.**
Waarschuwing	**Dit produkt dient volgens alle landelijke wetten en voorschriften te worden afgedankt.**
Varoitus	**Tämän tuotteen lopullisesta hävittämisestä tulee huolehtia kaikkia valtakunnallisia lakeja ja säännöksiä noudattaen.**
Attention	**La mise au rebut définitive de ce produit doit être effectuée conformément à toutes les lois et réglementations en vigueur.**
Warnung	**Dieses Produkt muß den geltenden Gesetzen und Vorschriften entsprechend entsorgt werden.**
Avvertenza	**L'eliminazione finale di questo prodotto deve essere eseguita osservando le normative italiane vigenti in materia.**
Advarsel	**Endelig disponering av dette produktet må skje i henhold til nasjonale lover og forskrifter.**
Aviso	**A descartagem final deste produto deverá ser efectuada de acordo com os regulamentos e a legislação nacional.**
¡Advertencia!	**El desecho final de este producto debe realizarse según todas las leyes y regulaciones nacionales.**
Varning!	**Slutlig kassering av denna produkt bör skötas i enlighet med landets alla lagar och föreskrifter.**

Lightning Activity Warning

Warning	**Do not work on the system or connect or disconnect cables during periods of lightning activity.**
Waarschuwing	**Tijdens onweer dat gepaard gaat met bliksem, dient u niet aan het systeem te werken of kabels aan te sluiten of te ontkoppelen.**
Varoitus	**Älä työskentele järjestelmän parissa äläkä yhdistä tai irrota kaapeleita ukkosilmalla.**
Attention	**Ne pas travailler sur le système ni brancher ou débrancher les câbles pendant un orage.**
Warnung	**Arbeiten Sie nicht am System und schließen Sie keine Kabel an bzw. trennen Sie keine ab, wenn es gewittert.**
Avvertenza	**Non lavorare sul sistema o collegare oppure scollegare i cavi durante un temporale con fulmini.**
Advarsel	**Utfør aldri arbeid på systemet, eller koble kabler til eller fra systemet når det tordner eller lyner.**
Aviso	**Não trabalhe no sistema ou ligue e desligue cabos durante períodos de mau tempo (trovoada).**
¡Advertencia!	**No operar el sistema ni conectar o desconectar cables durante el transcurso de descargas eléctricas en la atmósfera.**
Varning!	**Vid åska skall du aldrig utföra arbete på systemet eller ansluta eller koppla loss kablar.**

Jewelry Removal Warning

Warning **Before working on equipment that is connected to power lines, remove jewelry (including rings, necklaces, and watches). Metal objects will heat up when connected to power and ground and can cause serious burns or weld the metal object to the terminals.**

Waarschuwing **Alvorens aan apparatuur te werken die met elektrische leidingen is verbonden, sieraden (inclusief ringen, kettingen en horloges) verwijderen. Metalen voorwerpen worden warm wanneer ze met stroom en aarde zijn verbonden, en kunnen ernstige brandwonden veroorzaken of het metalen voorwerp aan de aansluitklemmen lassen.**

Varoitus **Ennen kuin työskentelet voimavirtajohtoihin kytkettyjen laitteiden parissa, ota pois kaikki korut (sormukset, kaulakorut ja kellot mukaan lukien). Metalliesineet kuumenevat, kun ne ovat yhteydessä sähkövirran ja maan kanssa, ja ne voivat aiheuttaa vakavia palovammoja tai hitsata metalliesineet kiinni liitäntänapoihin.**

Attention **Avant d'accéder à cet équipement connecté aux lignes électriques, ôter tout bijou (anneaux, colliers et montres compris). Lorsqu'ils sont branchés à l'alimentation et reliés à la terre, les objets métalliques chauffent, ce qui peut provoquer des blessures graves ou souder l'objet métallique aux bornes.**

Warnung **Vor der Arbeit an Geräten, die an das Netz angeschlossen sind, jeglichen Schmuck (einschließlich Ringe, Ketten und Uhren) abnehmen. Metallgegenstände erhitzen sich, wenn sie an das Netz und die Erde angeschlossen werden, und können schwere Verbrennungen verursachen oder an die Anschlußklemmen angeschweißt werden.**

Avvertenza **Prima di intervenire su apparecchiature collegate alle linee di alimentazione, togliersi qualsiasi monile (inclusi anelli, collane, braccialetti ed orologi). Gli oggetti metallici si riscaldano quando sono collegati tra punti di alimentazione e massa: possono causare ustioni gravi oppure il metallo può saldarsi ai terminali.**

Advarsel **Fjern alle smykker (inkludert ringer, halskjeder og klokker) før du skal arbeide på utstyr som er koblet til kraftledninger. Metallgjenstander som er koblet til kraftledninger og jord blir svært varme og kan forårsake alvorlige brannskader eller smelte fast til polene.**

Aviso **Antes de trabalhar em equipamento que esteja ligado a linhas de corrente, retire todas as jóias que estiver a usar (incluindo anéis, fios e relógios). Os objectos metálicos aquecerão em contacto com a corrente e em contacto com a ligação à terra, podendo causar queimaduras graves ou ficarem soldados aos terminais.**

¡Advertencia! **Antes de operar sobre equipos conectados a líneas de alimentación, quitarse las joyas (incluidos anillos, collares y relojes). Los objetos de metal se calientan cuando se conectan a la alimentación y a tierra, lo que puede ocasionar quemaduras graves o que los objetos metálicos queden soldados a los bornes.**

Varning! **Tag av alla smycken (inklusive ringar, halsband och armbandsur) innan du arbetar på utrustning som är kopplad till kraftledningar. Metallobjekt hettas upp när de kopplas ihop med ström och jord och kan förorsaka allvarliga brännskador; metallobjekt kan också sammansvetsas med kontakterna.**

Power Supply Warning

Warning **Do not touch the power supply when the power cord is connected. For systems with a power switch, line voltages are present within the power supply even when the power switch is off and the power cord is connected. For systems without a power switch, line voltages are present within the power supply when the power cord is connected.**

Waarschuwing **U dient de voeding niet aan te raken zolang het netsnoer aangesloten is. Bij systemen met een stroomschakelaar zijn er lijnspanningen aanwezig in de voeding, zelfs wanneer de stroomschakelaar uitgeschakeld is en het netsnoer aangesloten is. Bij systemen zonder een stroomschakelaar zijn er lijnspanningen aanwezig in de voeding wanneer het netsnoer aangesloten is.**

Varoitus **Älä kosketa virtalähdettä virtajohdon ollessa kytkettynä. Virrankatkaisimella varustetuissa järjestelmissä on virtalähteen sisällä jäljellä verkkojännite, vaikka virrankatkaisin on katkaistu-asennossa virtajohdon ollessa kytkettynä. Järjestelmissä, joissa ei ole virrankatkaisinta, on virtalähteen sisällä verkkojännite, kun virtajohto on kytkettynä.**

Attention **Ne pas toucher le bloc d'alimentation quand le cordon d'alimentation est branché. Avec les systèmes munis d'un commutateur marche-arrêt, des tensions de ligne sont présentes dans l'alimentation quand le cordon est branché, même si le commutateur est à l'arrêt. Avec les systèmes sans commutateur marche-arrêt, l'alimentation est sous tension quand le cordon d'alimentation est branché.**

Warnung **Berühren Sie das Netzgerät nicht, wenn das Netzkabel angeschlossen ist. Bei Systemen mit Netzschalter liegen Leitungsspannungen im Netzgerät vor, wenn das Netzkabel angeschlossen ist, auch wenn das System ausgeschaltet ist. Bei Systemen ohne Netzschalter liegen Leitungsspannungen im Netzgerät vor, wenn das Netzkabel angeschlossen ist.**

Avvertenza **Non toccare l'alimentatore se il cavo dell'alimentazione è collegato. Per i sistemi con un interruttore di alimentazione, tensioni di linea sono presenti all'interno dell'alimentatore anche quando l'interruttore di alimentazione è en posizione di disattivazione (off), se il cavo dell'alimentazione è collegato. Per i sistemi senza un interruttore, tensioni di linea sono presenti all'interno dell'alimentatore quando il cavo di alimentazione è collegato.**

Advarsel **Berør ikke strømforsyningsenheten når strømledningen er tilkoblet. I systemer som har en strømbryter, er det spenning i strømforsyningsenheten selv om strømbryteren er slått av og strømledningen er tilkoblet. Når det gjelder systemer uten en strømbryter, er det spenning i strømforsyningsenheten når strømledingen er tilkoblet.**

Aviso **Não toque na unidade abastecedora de energia quando o cabo de alimentação estiver ligado. Em sistemas com interruptor, a corrente eléctrica estará presente na unidade abastecedora, sempre que o cabo de alimentação de energia estiver ligado, mesmo quando o interruptor se encontrar desligado. Para sistemas sem interruptor, a tensão eléctrica dentro da unidade abastecedora só estará presente quando o cabo de alimentação estiver ligado.**

¡Advertencia! **No tocar la fuente de alimentación mientras el cable esté enchufado. En sistemas con interruptor de alimentación, hay voltajes de línea dentro de la fuente, incluso cuando el interruptor esté en Apagado (OFF) y el cable de alimentación enchufado. En sistemas sin interruptor de alimentación, hay voltajes de línea en la fuente cuando el cable está enchufado.**

Varning! **Vidrör inte strömförsörjningsenheten när nätsladden är ansluten. För system med strömbrytare finns det nätspänning i strömförsörjningsenheten även när strömmen har slagits av men nätsladden är ansluten. För system utan strömbrytare finns det nätspänning i strömförsörjningsenheten när nätsladden är ansluten.**

Power Supply Disconnection Warning

Warning **Before working on a chassis or working near power supplies, unplug the power cord on AC units; disconnect the power at the circuit breaker on DC units.**

Waarschuwing **Voordat u aan een frame of in de nabijheid van voedingen werkt, dient u bij wisselstroom toestellen de stekker van het netsnoer uit het stopcontact te halen; voor gelijkstroom toestellen dient u de stroom uit te schakelen bij de stroomverbreker.**

Varoitus **Kytke irti vaihtovirtalaitteiden virtajohto ja katkaise tasavirtalaitteiden virta suojakytkimellä, ennen kuin teet mitään asennuspohjalle tai työskentelet virtalähteiden läheisyydessä.**

Attention **Avant de travailler sur un châssis ou à proximité d'une alimentation électrique, débrancher le cordon d'alimentation des unités en courant alternatif ; couper l'alimentation des unités en courant continu au niveau du disjoncteur.**

Warnung **Bevor Sie an einem Chassis oder in der Nähe von Netzgeräten arbeiten, ziehen Sie bei Wechselstromeinheiten das Netzkabel ab bzw. schalten Sie bei Gleichstromeinheiten den Strom am Unterbrecher ab.**

Avvertenza **Prima di lavorare su un telaio o intorno ad alimentatori, scollegare il cavo di alimentazione sulle unità CA; scollegare l'alimentazione all'interruttore automatico sulle unità CC.**

Advarsel **Før det utføres arbeid på kabinettet eller det arbeides i nærheten av str¿mforsyningsenheter, skal str¿mledningen trekkes ut pŒ vekselstrømsenheter og strømmen kobles fra ved strømbryteren på likestrømsenheter.**

Aviso **Antes de trabalhar num chassis, ou antes de trabalhar perto de unidades de fornecimento de energia, desligue o cabo de alimentação nas unidades de corrente alternada; desligue a corrente no disjuntor nas unidades de corrente contínua.**

¡Advertencia! **Antes de manipular el chasis de un equipo o trabajar cerca de una fuente de alimentación, desenchufar el cable de alimentación en los equipos de corriente alterna (CA); cortar la alimentación desde el interruptor automático en los equipos de corriente continua (CC).**

Varning! **Innan du arbetar med ett chassi eller nära strömförsörjningsenheter skall du för växelströmsenheter dra ur nätsladden och för likströmsenheter bryta strömmen vid överspänningsskyddet.**

Power Disconnection Warning

Warning Before working on a system that has an On/Off switch, turn OFF the power and unplug the power cord.

Waarschuwing Voordat u aan een systeem werkt dat een aan/uit schakelaar heeft, dient u de stroomvoorziening UIT te schakelen en de stekker van het netsnoer uit het stopcontact te halen.

Varoitus Ennen kuin teet mitään sellaiselle järjestelmälle, jossa on kaksiasentokytkin, katkaise siitä virta ja kytke virtajohto irti.

Attention Avant de travailler sur un système équipé d'un commutateur marche-arrêt, mettre l'appareil à l'arrêt (OFF) et débrancher le cordon d'alimentation.

Warnung Bevor Sie an einem System mit Ein/Aus-Schalter arbeiten, schalten Sie das System AUS und ziehen das Netzkabel aus der Steckdose.

Avvertenza Prima di lavorare su un sistema dotato di un interruttore on/off, spegnere (OFF) il sistema e staccare il cavo dell'alimentazione.

Advarsel Slå AV strømmen og trekk ut strømledningen før det utføres arbeid på et system som er utstyrt med en av/på-bryter.

Aviso Antes de começar a trabalhar num sistema que tem um interruptor on/off, DESLIGUE a corrente eléctrica e retire o cabo de alimentação da tomada.

¡Advertencia! Antes de utilizar cualquier sistema equipado con interruptor de Encendido/Apagado (ON/OFF), cortar la alimentación y desenchufar el cable de alimentación.

Varning! Slå AV strömmen och dra ur nätsladden innan du utför arbete på ett system med strömbrytare.

Grounded Equipment Warning

Warning This equipment is intended to be grounded. Ensure that the host is connected to earth ground during normal use.

Waarschuwing Deze apparatuur hoort geaard te worden Zorg dat de host-computer tijdens normaal gebruik met aarde is verbonden.

Varoitus Tämä laitteisto on tarkoitettu maadoitettavaksi. Varmista, että isäntälaite on yhdistetty maahan normaalikäytön aikana.

Attention **Cet équipement doit être relié à la terre. S'assurer que l'appareil hôte est relié à la terre lors de l'utilisation normale.**

Warnung **Dieses Gerät muß geerdet werden. Stellen Sie sicher, daß das Host-Gerät während des normalen Betriebs an Erde gelegt ist.**

Avvertenza **Questa apparecchiatura deve essere collegata a massa. Accertarsi che il dispositivo host sia collegato alla massa di terra durante il normale utilizzo.**

Advarsel **Dette utstyret skal jordes. Forviss deg om vertsterminalen er jordet ved normalt bruk.**

Aviso **Este equipamento deverá estar ligado à terra. Certifique-se que o host se encontra ligado à terra durante a sua utilização normal.**

¡Advertencia! **Este equipo debe conectarse a tierra. Asegurarse de que el equipo principal esté conectado a tierra durante el uso normal.**

Varning! **Denna utrustning är avsedd att jordas. Se till att värdenheten är jordad vid normal användning.**

Installation Warning

Warning	**Read the installation instructions before you connect the system to its power source.**
Waarschuwing	**Raadpleeg de installatie-aanwijzingen voordat u het systeem met de voeding verbindt.**
Varoitus	**Lue asennusohjeet ennen järjestelmän yhdistämistä virtalähteeseen.**
Attention	**Avant de brancher le système sur la source d'alimentation, consulter les directives d'installation.**
Warnung	**Lesen Sie die Installationsanweisungen, bevor Sie das System an die Stromquelle anschließen.**
Avvertenza	**Consultare le istruzioni di installazione prima di collegare il sistema all'alimentatore.**
Advarsel	**Les installasjonsinstruksjonene før systemet kobles til strømkilden.**
Aviso	**Leia as instruções de instalação antes de ligar o sistema à sua fonte de energia.**
¡Atención!	**Ver las instrucciones de instalación antes de conectar el sistema a la red de alimentación.**
Varning!	**Läs installationsanvisningarna innan du kopplar systemet till dess strömförsörjningsenhet.**

Class 1 Laser Product Warning

Warning	**Class 1 laser product.**
Waarschuwing	**Klasse-1 laser produkt.**
Varoitus	**Luokan 1 lasertuote.**
Attention	**Produit laser de classe 1.**
Warnung	**Laserprodukt der Klasse 1.**
Avvertenza	**Prodotto laser di Classe 1.**
Advarsel	**Laserprodukt av klasse 1.**

Aviso **Produto laser de classe 1.**

¡Advertencia! **Producto láser Clase I.**

Varning! **Laserprodukt av klass 1.**

Laser Beam Warning

Warning **Do not stare into the beam or view it directly with optical instruments.**

Waarschuwing **Niet in de straal staren of hem rechtstreeks bekijken met optische instrumenten.**

Varoitus **Älä katso säteeseen äläkä tarkastele sitä suoraan optisen laitteen avulla.**

Attention **Ne pas fixer le faisceau des yeux, ni l'observer directement à l'aide d'instruments optiques.**

Warnung **Nicht direkt in den Strahl blicken und ihn nicht direkt mit optischen Geräten prüfen.**

Avvertenza **Non fissare il raggio con gli occhi né usare strumenti ottici per osservarlo direttamente.**

Advarsel **Stirr eller se ikke direkte pŒ strŒlen med optiske instrumenter.**

Aviso **Não olhe fixamente para o raio, nem olhe para ele directamente com instrumentos ópticos.**

¡Advertencia! **No mirar fijamente el haz ni observarlo directamente con instrumentos ópticos.**

Varning! **Rikta inte blicken in mot strålen och titta inte direkt på den genom optiska instrument.**

CHAPTER 2

Introducing the MGX 8250 Switch

This chapter contains a brief outline of the features of the Cisco MGX 8250 switch. An illustration of the AC-powered version of the switch appears in Figure 2-1.

Figure 2-1 MGX 8250 Switch

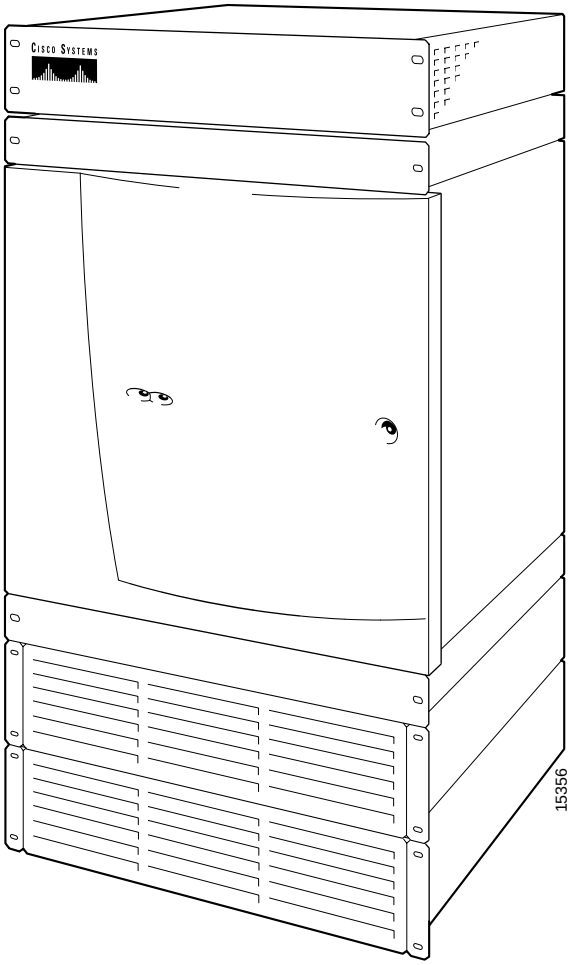

MGX 8250 System Overview

The Cisco MGX 8250 wide-area edge switch supports:

- Integrated IP+ATM services
- Frame Relay
- IP-based virtual private network
- Video
- Circuit emulation services for private line replacement

The Applications of the MGX 8250 Switch

The MGX 8250 switch operates in two operational *applications*:

- As a *feeder*, the MGX 8250 switch concentrates narrow-band and medium-band ATM, Frame Relay, and into a single, wide-band ATM feeder trunk to an BPX 8600-series switch.
- As a *stand-alone node*, the MGX 8250 switch concentrates narrow-band and medium-band ATM, Frame Relay, and voice into a single ATM line to at third-party switch. The MGX 8250 interface in this application is a UNI or an NNI.

For a description of how to configure the switches for a particular application, see Chapter 5, "Configuring the MGX 8250 Switch."

The switch is also capable of supporting Cisco Multiprotocol Label Switching (MPLS).

Universal Edge Architecture

The MGX 8250 switch can support a wide range of services over narrowband and mid-band user interfaces. It maps all the service traffic to and from ATM by using standardized interworking methods.

The supported interfaces for user-traffic are:

- Frame Relay UNI on T3, E3, HSSI, T1, and E1 lines
- ATM UNI and FUNI and optional inverse multiplexing for ATM (IMA)
- Frame Relay to ATM network interworking and service interworking
- Circuit emulation services

The optional Service Resource Module-3T3 (MGX-SRM-3T3/B) can support up to 80 T1 interfaces over its three T3 lines and provide 1:N redundancy for the T1 and E1 cards.

The modular, software-based system architecture enables the switch to support new features through downloadable software upgrades or new hardware modules.

The MGX 8250 backplane supports a minimum of 1.2 Gbps of non-blocking switching up to 45 Gbps. Individual line rates range from DS0 through OC-12.

Standards-Based Conversion to ATM

The MGX 8250 switch converts all user information into 53-byte ATM cells by using the appropriate ATM Adaptation Layer (AAL) for transport over the ATM backbone network. The individual service modules segment and reassemble (SAR) cells to eliminate system bottlenecks. The following list shows the applicable AAL for each service:

- Circuit emulation services uses AAL1.
- Frame Relay-to-ATM network interworking uses AAL5 and Frame Relay Service Specific Convergence Sub-layer (FR-SSCS).
- Frame Relay-to-ATM service interworking uses both transparent and translation modes to map Frame Relay to native ATM AAL5.
- Frame Forwarding uses AAL5.

MGX 8250 Enclosure and Power

The MGX 8250 enclosure contains up to 24 service modules (I/O cards) and 4 optional Service Redundancy Modules (SRMs) provide redundancy. It resides in either in a 19-inch or a 23-inch rack. The closed, 19-inch Cisco-built rack also has an optional seismic anchor. The system can accept power from either a DC or an AC source.

Table 2-1 Power Supply Options

Model	Description
MGX-DC	MGX 8250 DC PEM and MBX-CAB-AC/DC
MGX-AC1-1	NR AC system for MGX 8250: AC shelf, 1 feed, 1 PS, MGX-CAB-AC/DC
MGX-AC2-2	Red AC pwr, red AC feed, AC shel, 2 PS, 2 MGX-CAB-AC/DC
PS-1200-AC	1200 Watt power supply for AC systems
MGX-AC-110	110 VAC tray and air intake
MGX-DC-2U	2U air intake and DC PEM

MGX 8250 Cards

The MGX 8250 switch supports two types of *card sets*: the *core cards* (or core modules) and *service modules*. The Processor Switching Module (PXM) and optional Service Resource Module (SRM) are *core cards*. The *service modules* provide the interface to the transport technologies of the CPE—Frame Relay, ATM, and so on. A card set consists of a front card with its attached daughter card and a back card (or line module). The front card contains the processing intelligence and, on the daughter card, the firmware that distinguishes the interface (OC-3, T3, E3, and so on). The back card is a simple card that provides the electrical interface for one or more lines of a particular type. The MGX 8250 front and back cards are the:

- Processor Switching Module (PXM1)
  This front card controls the switch and supports external interfaces for user-access and trunking or UNI ports. The back cards consist of a user interface card (PXM-UI) and a broadband network module (see subsequent list items).

- Processor Switch Module User Interface (PXM1-UI)
  The PXM1-UI is the *user interface* card that has various types of ports to let you access and control the switch.
- Broadband Network Module (MGX-SMFIR-1-622 and MGX-SMFLR-1-622)
  The SMFIR-1-622 is a *broadband network* module for the PXM and provides a SONET OC12/STM4 ATM interface at 622 Mbps.
- Broadband Network Module (MGX-MMF-4-155)
  The MMF-4-155 is a *broadband network* module for the PXM and provides 4 SONET OC3/STM1 ATM interfaces at 155 Mbps.
- Broadband Network Module (MGX-BNC-2T3)
  The MGX-BNC-2T3 is a *broadband network* module for the PXM and provides 2 T3 ATM interfaces.
- Broadband Network Module (MGX-BNC-2E3)
  The MGX-BNC-2E3 is a *broadband network* module for the PXM and provides 2 E3 ATM interfaces. A version for Australia, New Zealand, and elsewhere is available (MGX-BNC-2E3A).
- Frame Service Module for T3 and E3 (MGX-FRSM-2E3T3)
  The MGX-FRSM-2E3/T3 provides interfaces for up to two T3 or E3 frame relay lines, each of which can support either 2 T3 lines (each at 44.736 Mbps) or 2 E3 lines (each at 34.368Mbps) FR-UNI, ATM-FUNI, or Frame Forwarding port.
- Frame Service Module for channelized T3 (MGX-FRSM-2CT3)
  The MGX-FRSM-2CT3 supports interfaces for up to two T3 channelized frame relay lines, each of which supports 56 Kbps, 64 Kbps, Nx56 Kbps, Nx64 Kbps, T1 ports for a total of 256 ports that can be freely distributed across the two T3 lines.
- Frame Service Module for unchannelized HSSI (MGX-HS2/B)
  The MGX-HS2/B supports interfaces for 2 unchannelized HSSI lines, each of which supports approximately 51 Mbps. With both lines operating, maximum throughput is 70 Mbps.
- Frame Service Module for T1 (AX-FRSM-8T1)
  The AX-FRSM-8T1 provides interfaces for up to eight T1 lines, each of which can support one 56 Kbps or one Nx64 Kbps FR-UNI, ATM-FUNI, or a Frame Forwarding port.
- Frame Service Module for T1, channelized (AX-FRSM-8T1c)
  The AX-FRSM-8T1c provides interfaces for up to eight T1 lines, each of which can support up to 24 56 Kbps or *N* x 64 Kbps FR-UNI, ATM-FUNI, or Frame Forwarding port.
- Frame Service Module for E1 (AX-FRSM-8E1)
  The AX-FRSM-8E1 provides interfaces for up to eight E1 lines, each of which can support one 56 Kbps or one *N* x 64 Kbps FR-UNI, ATM-FUNI, or frame forwarding port.
- Frame Service Module for E1, channelized (AX-FRSM-8E1c)
  The AX-FRSM-8E1c provides interfaces for up to 8 E1 channelized frame relay lines Each line can support *N* x 64-Kbps or (up to 31) 56-Kbps FR-UNI, ATM-FUNI, or frame forwarding ports.
- ATM UNI Service Module for T1 (MGX-AUSM/B-8T1)
  The MGX-AUSM/B-8T1 provides interfaces for up to eight T1 lines. You can group *N* x T1 lines to form a single, logical interface (IMA).
- ATM UNI Service Module for E1 (MGX-AUSM/B-8E1)
  The MGX-AUSM/B-8E1 provides interfaces for up to eight E1 lines. You can group *N* x E1 lines to form a single, logical interface (IMA).
- Circuit Emulation Service Module for T1 (AX-CESM-8T1)
  The AX-CESM-8T1 provides interfaces for up to eight T1 lines, each of which is a 1.544 Mbps structured or unstructured synchronous data stream.

- Circuit Emulation Service Module for E1 (AX-CESM-8E1)
  The AX-CESM-8E1 provides interfaces for up to eight E1 lines, each of which is a 2.048-Mbps structured or unstructured synchronous data stream.
- Route Processor Module (RPM)
  The RPM is a Cisco 7200-series router redesigned as a double-height card. Each RPM uses two single-height back cards. The back-card types are: single-port Fast Ethernet, four-port Ethernet, and single-port (FDDI).
- Service Resource Module (MGX-SRM-3T3/B)
  The optional MGX-SRM-3T3/B provides bit error rate testing (BERT), 1:N redundancy for T1 and E1 service modules, and a de-multiplexing function for T1 service called *bulk mode*.
- Smart Serial Interface FRSM-HS1/B 12IN1
  A multi-personality back card that supports either X.25 or V.35 interface.

MGX 8250 Management

To give you access for control purposes, the MGX 8250 switch supports high- and low-level user interfaces. You can use the Cisco WAN Manager application (formerly StrataView Plus) for connection management, the CiscoView application for hardware configuration, and a command line interface for low-level control of hardware functionality and connection control. An assortment of ports and protocols supports these user-interfaces. For communicating with the MGX 8250 switch, the control port (SLIP protocol only), the LAN (Ethernet) port, and the in-band ATM connection (feeder application only) all support access by the command line interface (CLI) via Telnet, TFTP, and SNMP protocols.

The downloadable firmware on each card determines the functionality, and you can upgrade functionality by downloading new firmware through a TFTP application on a workstation or a PC.

The current status and configuration parameters of the MGX 8250 modules reside in a Management Information Base (MIB). The firmware on each card updates the MIB as changes in status and configuration occur.

CHAPTER 3

Site Preparation

This chapter describes the steps to take and the considerations you should keep in mind prior to installing the modules in an open rack. It also contains information that applies to an MGX 8250 installation in a Cisco closed rack. If the switch arrives in a Cisco closed rack, your initial concerns would be the cabinet grounding, power connections, and optional seismic stability plate. For specifications on the enclosure and power system, see Appendix A, “System Specifications.”

The topics and section names in this chapter are:

- Descriptions of reserved slots and recommended card locations appear in “Card Slot Locations.”
- A list of general requirements for the site appear in “Site Preparation.”
- Earthquake provisions are introduced in “Seismic Considerations,” and instructions for installing the optional seismic stability plate appear in “Seismic Anchoring for a Cisco Rack.”
- “Power and Grounding” describes the policies and requirements for power and grounding at the switch enclosure and the building site.
- “Making the Frame Bonding (Ground) Connection” describes how to connect grounding.

Parts Checklist

Before proceeding with the installation, verify that all the ordered parts are present and in good condition. Store a record of the parts and serial numbers. If any parts are missing or damaged, contact your sales representative.

Card Slot Locations

The reserved slots are 7 and 8 for the primary and redundant Processor Switching Modules (PXMs) and 15, 16, 31, and 32 for the Service Resource Modules (SRMs). These slot reservations reflect a fully redundant configuration for these cards. The maximum number of slots remaining for service modules is 24—less when the unit contains one or more double-height cards such as the Route Processor Module (RPM). Also, although not reserved, slots 9 and 10 should be the first choices for the location of one or more RPMs due to backplane wiring.

If you are considering any future card changes in which you replace a single-height card with a double-height card, place the single-height replacement candidates as far left in the card cage as possible. The reason is that single to double-height slot conversions must begin at the left and proceed to the right.

The slots on the top half of the card cage are suitable for the T3/E3 and OC-3 cards because the higher speed cell buses reside in the upper portion of the backplane. Place the service modules that operate at T1 or E1 rates in the lower half of the switch.

Site Preparation

In addition to the power and grounding requirements detailed in subsequent sections, the site must satisfy requirements in the following categories:

- Telecommunications Requirements

  In some international service areas, telecommunication rules for a private network connected to the public switched networks may require that screws, bolts, or nuts that secure the cabling are tightened to the degree that removing them requires a tool.

- Space

  The MGX 8250 switch requires floor space 19.9 inches (50.5 cm) wide or 23 inches wide (59 cm). Clearance around the cabinet must allow for access to the front and back of the cabinet while the door is open. The suggested clearance is 30 inches at the front and back and a nominal 12 inches on each side. DC-powered switches occupy 28 vertical inches (71.1 cm). AC-powered switches occupy 33.25 vertical inches (84.5 cm).

  The mounting rail pattern follows the EIA standard of 56 inches (32 rack-mount units).

- Operating Environment

  The operating environment should adhere to the following limits:

  - Temperature—0–40 degrees C (32–104 degrees F) normal operation, 50 degrees to 72 hours.
  - Humidity—up to 85% relative humidity, non-condensing.
  - Shock—maximum 10 G for 10 milliseconds at 1/2 sine wave.
  - Vibration—up to 1/4 G, 20 to 500 Hz.

- Wiring to AC or DC Power Source

  For AC-powered systems, Cisco provides 6-foot (1.8-meter) power cords. For DC-powered systems, the customer or installer determines the wire length and supplies the wire. The wire should be 6 AWG (10 square millimeters).

- Heat Dissipation

  A fully loaded, AC-powered MGX 8250 switch dissipates up to 9560 BTUs (2.8 KW hour.)
  A DC-powered MGX 8250 switch dissipates up to 8200 BTUs (2.4 KW hour.)

- Weight

  A DC-powered system can weigh up to 190 lbs (87 kgs). An AC-powered system can weigh up to 250 lbs (112.5 kgs).

Caution If you move a Cisco-supplied cabinet, do not push it at its sides. Push at the front or back.

- Flooring

  Cisco recommends raised flooring with sufficient under-floor space for the cables.

- Mounting

Switch location should accommodate the routing of data cables and the termination of the telephone company or common carrier circuits.

- Electrostatic Discharge

  The building should provide enough grounding to prevent damage from electrostatic discharge. For details, see "Bonding and Grounding." Each switch comes with a protective wrist strap.

Seismic Considerations

To secure a Cisco-supplied cabinet, holes in the upper and lower corners accommodate 3/8" or 1/2" bolts. Also, an optional *stability plate* can be purchased with the Cisco cabinet. The stability plate is bolted to the floor, then the Cisco cabinet is bolted to the stability plate. Instructions for installing the stability plate appear in the section "Seismic Anchoring for a Cisco Rack."

Power and Grounding

This section describes the requirements for electrical power and grounding at the switch and the site. These requirements apply to Central Office (CO) and Private Enterprise (PE) sites.

AC-Power Circuit Breakers

For a 220 VAC-powered system, verify that power comes from dedicated AC branch circuits. Each circuit must be protected by a dedicated, two-pole circuit breaker. The circuit breakers at the source must have a rated current and trip delay greater than those of the MGX 8250 circuit breaker. Cisco recommends that the site have a 20-Amp, 2-pole AC circuit breaker with a long trip delay at each branch circuit.The manufacturer of this circuit breaker is ETA. The ETA part number is 8340-F120-P1P2-B2H020A.

For a 110 VAC-powered system, verify that power comes from dedicated AC branch circuits. The circuits must be protected by a dedicated, 15 Amp minimum circuit breaker. Cisco Systems recommends that the site have a 15 Amp AC circuit breaker for each 110 VAC outlet.

DC-Power Circuit Breakers

For a DC-powered system, verify that its power comes from a dedicated DC branch circuit. This branch circuit must be protected by a dedicated circuit breaker. The circuit breaker must have a rated current and trip delay that is greater than those of the MGX 8250 circuit breaker. Cisco Systems recommends the site have a dedicated 60-Amp, 1-pole circuit breaker with a medium trip delay at each branch circuit.

DC-powered switches use a 60-Amp, 1-pole circuit breaker with a short trip delay on each –48-V input.

Electrical Power for AC-Powered Switches

The MGX 8250 AC power requirement are 220 VAC with a worst-case range of 180–240 VAC or 110 VAC with a worst case range 100-240 VAC. See also Appendix A, "System Specifications." The AC power source must be within 6 feet (1.8 m) of the system and easily accessible. Before turning on the power, verify that the power supplied to the switch comes from a dedicated branch circuit.

Note A 220V N+1 system filled with 5 or less full-height cards requires a minimum of two AC power supply modules both for dual and single AC line cords.

For systems with more than 5 full height cards but less than ten, the system requires a minimum of four AC power supplies for dual AC line cord (two on each line cord) or a minimum of three AC power supplies for a single cord system.

For systems with more than 10 full-height cards, the system requires all six power supplies for a dual AC line cord system and four power supplies for a single AC line cord system.

The 110 VAC power supply has a maximum output power of 1200W per power supply module. However, because of safety limitation imposed on the line cord, the 110 VAC power supply output power is shown in Table 3-1.

Note For a 110V powered system, the options are 1 power supply module for a non-redundant system or two power supply modules for a redundant (2N) system. The maximum card count supported is 10 full-height cards.

Table 3-1 110 VAC Power Module Output Power

Input voltage (Volts AC)	Power output (Watts)
100	900
110	1000
120	1100
130 - 264	1200

Note If the power requirement of installed cards exceed the power capability of the system, an error message is generated.

Caution Consult Cisco engineering if the plans for MGX 8250 AC power include a portable, uninterruptible power source (UPS). Cisco recommends a UPS with a low output impedance and the capacity to provide the necessary fault current to trip the protection devices. Do not use a UPS or any power source with a Ferro-Resonant transformer.

The power receptacles to which the switch connects must be of the grounding type. The grounding conductors that connect to the receptacles should connect to protective earth at the service equipment. For reference, Figure 3-1 shows the electrical relationship in the three-wire wall plug.

Cisco can provide 220 VAC power cords with the following plugs:

- 20 A NEMA L620, 3-prong plug (domestic U.S.)
- 13 A 250 VAC BS1363, 3-prong fused plug (UK, Ireland)
- CEE 7/7 (Continental Europe)

- AS3112 (Australia/New Zealand)
- CEI23-16/VII (Italy)

Figure 3-1 Electrical Relationship of AC Plug Wiring

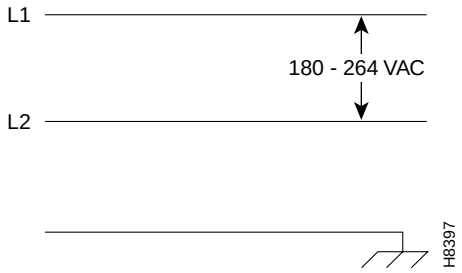

Either Cisco Systems or the customer can provide the power cord for a 110 VAC powered system. See Table 3-2 for the power cords that Cisco can supply. In addition, you can special-order AC cables with other plugs or different lengths. If you want to construct the power cord, it must mate with an IEC320 (C-14) 10/15A male receptacle on the back of the AC power module.

Table 3-2 110 VAC Power Cables

Cable Parameter	Description
Cable	Provided with 8 feet (2.3 m) of 3-conductor wire with plug.
Plug (customer end)	20 A NEMA L620, 3-prong plug (domestic U.S.) Need 15A NEMA 5-15 for US and Canada. 13 A 250 Vac BS1363, 3-prong fused plug (UK, Ireland) CEE 7/7 (Continental Europe) AS3112 (Australia/New Zealand) CEI23-16/VII (Italy) 125V/15A North America

Electrical Power for DC-Powered Switches

This section describes the safety and standards-body compliance issues for DC-powered systems. For the bonding and grounding issues related to electrical noise, see the “Bonding and Grounding” section below.

The DC-powered model of the MGX 8250 switch uses one or two Power Entry Modules (PEMs) to accept DC current. The DC PEMs should connect to a source capable of supplying 60 Amps of current. Each branch circuit at the source should have a 60-Amp circuit breaker, and the wires connecting the PEMs to the sources should be capable of carrying 60 Amps. A 6 AWG (10 square millimeters) copper wire is adequate. Also, consult the local or national codes for conductor sizing for DC supply connections if necessary. Conductors must be suitable for 60 Amps.

Be sure to connect the grounding wire conduit to a solid earth ground. Cisco recommends a closed loop to terminate the ground conductor at the ground stud. (See also “Bonding and Grounding” section below.)

In summary, note the following for DC systems:

Caution This equipment has a connection between the earth conductor of the DC power supply circuit and the earthing conductor.

This equipment shall be connected directly to the DC supply system earthing electrode conductor or to a bonding jumper from an earthing terminal bar or bus to which the DC supply system earthing electrode is connected.

This equipment shall be located in the same immediate area (such as adjacent cabinets) as any other equipment that has a connection between the earthed conductor to the same DC supply circuit and the earthing connector and also the point of earthing of the DC system. The DC system shall not be earthed elsewhere.

The DC supply source is to be located within the same premises as this equipment. Switching or disconnecting devices shall not be in the earthed circuit conductor between the DC source and the point of the connection of the earthing electrode conductor.

Additional guidelines are

- At the input of each Power Entry Module (PEM) in an MGX 8250 switch, connect only a –48 VDC source that complies with the Safety Extra Low Voltage (SELV) requirements in UL 1950, EC 950, EN 60950, and CSA C22.2 No. 950-95.

A DC-powered MGX 8250 switch should be installed in a *restricted access* location. In the United States, restricted access is defined in Articles 10-116, 10-117, and 10-118 of the National Electrical Code ANSI/NFPA 70.

Bonding and Grounding

To maintain the full EMI and EMC integrity of this equipment, it must be bonded to an *integrated ground plane* or a *non-isolated ground plane* network. The purpose is to mitigate the damaging effects of electrostatic discharge or lightning. Refer to the latest edition of ITU-T Recommendation K.27 or Bellcore GR-1089-CORE to ensure that the correct bonding and grounding procedures are followed. As recommended in these documents, a frame bonding connection is provided on the Cisco cabinet for rack-mounted systems. To see how to make a connection, see "Making the Frame Bonding (Ground) Connection" later in this chapter.

Except for the AC power supply modules, every module in a rack-mount system uses the rack for grounding. Therefore, the rack must connect to protective earth ground and the equipment must be secured to the rack so as to ensure good bonding.

A DC-powered switch must have grounding conductors that connect at two separate locations:

- The grounding conductor provided with the supply source must connect to the correct terminal of the Power Entry Module (PEM).
- A grounding conductor must connect to an appropriate terminal on a rack or the chassis of a switch.

For DC-powered systems, the Cisco MSSBU has designed the MGX 8250 switch and other WAN switches to connect to a *non-isolated* ground system. In contrast, routers and other LAN equipment often use an *isolated* grounding scheme. If properly wired together through an *equalization connection* as described in ITU-T recommendation K.27, the isolated and non-isolated ground systems can form a mixed grounding system. The potential between any points in the ground system —whether or not the ground system is mixed—must not exceed 2% of the referenced voltage (2% of 48 volts is 960 millivolts).

Wiring a Mixed Ground System with Redundant Supplies

A mixed ground system appears in Figure 3-2. This figure shows safety and earth grounds and the primary and redundant DC sources Battery A and Battery B. Individual ground conductors are labeled Z1, Z2, ..., Z5. The Z represents the impedance of the ground conductor between a chassis, for example, and a connection to the building's ground system. The numbers 1, ..., 4 represent building ground points and indicate that an impedance can exist between different points in the ground system of the building. Each of these symbols indicate that a voltage drop may result (but must not exceed 2% of the referenced voltage). See Table 3-3 for a definition of each Z1–Z5.

Figure 3-2 Mixed Grounding System

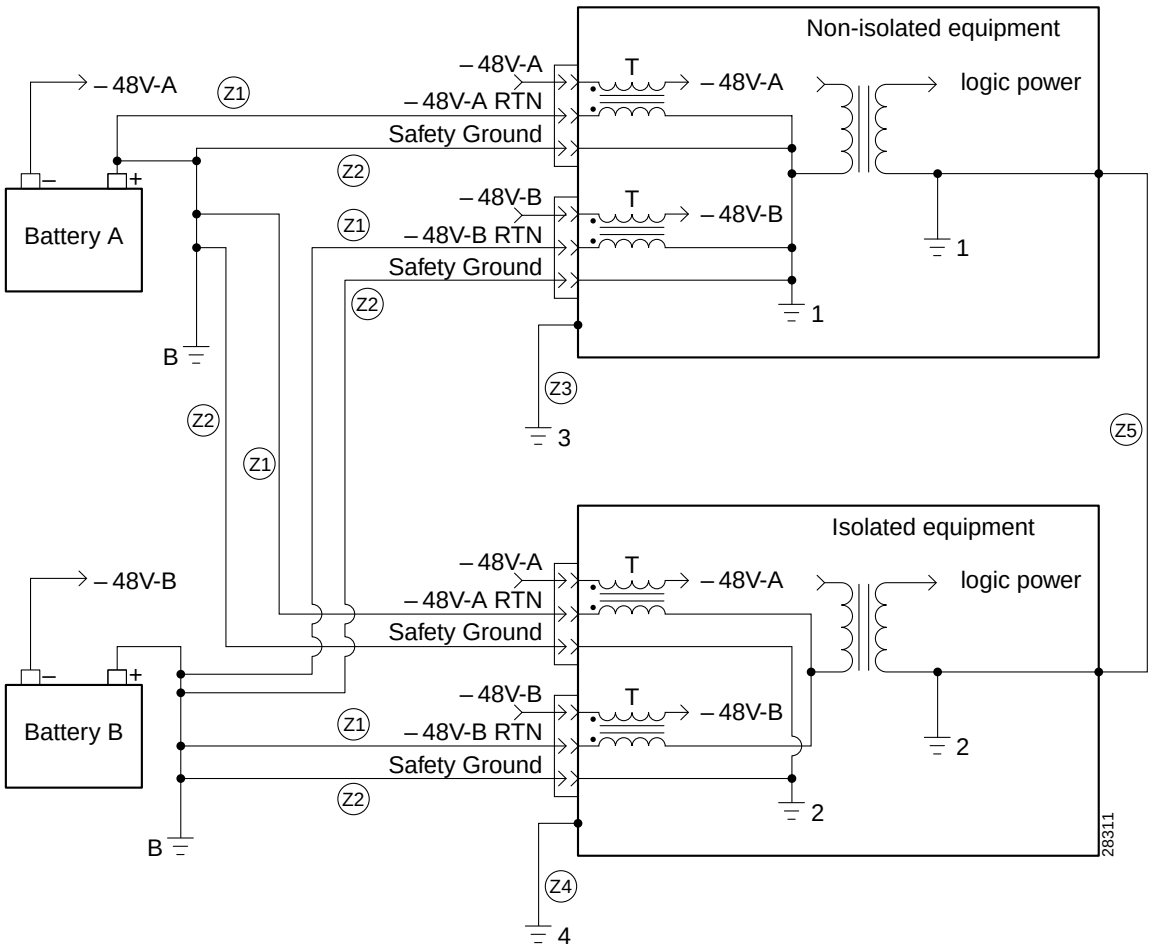

Table 3-3 Ground Point Descriptions for Mixed Grounding

Connection	Description
Z1	–48 VDC return.
Z2	Protective earth or safety ground (green/yellow).
Z3	Equipment ground for non-isolated equipment.
Z4	Equipment ground for isolated equipment.

Table 3-3 Ground Point Descriptions for Mixed Grounding (continued)

Connection	Description
Z5	Equalizing frame ground. This ground creates low-impedance equalization between frames.
B	Battery ground.
1, 2, 3, 4	Connection points to the building's ground system: a potential can exist between these points within the ground system.
T	Common-mode EMI filters.

As Figure 3-2 shows, the non-isolated system has a 48 VDC return that internally connects to the backplane. (This design calls for a hard-wired return and so does not allow for an *optional* or alternate ground connection.) The internal connection provides a low-impedance connection between 48 VDC return and frame ground. This grounding scheme protects the signals on the backplane from corruption by transients that can result from lightning or electrostatic discharge.

To improve protection against transients, the loop area (and resultant loop impedance) should be made as small as possible by locating the –48 VDC supply, 48 VDC return, and protective earth conductors as close to each other as possible.

As recommended in ITU-T K.27, the multi-point grounding in a mesh bonding network provides the best protection for equipment by providing the lowest impedance in the ground system. For more detailed information, refer to the recommendation itself.

Conductor Characteristics for Carrying Current and Ensuring Low Voltage Drops

To prevent signal degradation, a conductor must be large enough to prevent its impedance from creating a voltage drop equal to 2 percent of the reference voltage. Also, the protective earth conductor must be large enough to carry all the current if the 48 VDC return fails. This latter requirement is for safety. Full fault redundancy is achieved by having equal size conductors for the protective earth ground and the 48 VDC return of the switch.

For wire gauges that prevent unacceptable voltage drops over different lengths of copper wire, see Table 3-4. For the resistance of 1000 feet of copper wire for each gauge of wire, see Table 3-5. These references are for planning purposes and may be further subject to local laws and practices.

Table 3-4 Wire Gauge for Current Loads Over Copper Wire Lengths

DC Current	Distance in Feet						
	25 feet	50 feet	75 feet	100 feet	150 feet	200 feet	400 feet
5 Amps	18	14	14	12	10	8	6
10 Amps	14	12	10	8	8	6	2
15 Amps	14	10	8	8	6	4	2
20 Amps	12	8	8	6	4	2	0
25 Amps	12	8	6	4	4	2	0
30 Amps	10	8	6	4	2	2	00
35 Amps	10	6	4	2	2	1	000
40 Amps	8	6	2	2	2	0	000

Table 3-4 Wire Gauge for Current Loads Over Copper Wire Lengths (continued)

DC Current	Distance in Feet						
45 Amps	8	6	4	2	1	0	0000
50 Amps	8	4	4	2	1	00	_____
55 Amps	8	4	2	2	0	00	_____
60 Amps	8	4	2	2	0	00	_____
65 Amps	6	4	2	1	0	000	_____
70 Amps	6	4	2	1	00	000	_____
75 Amps	6	4	2	1	00	000	_____
100 Amps	4	2	1	00	000	_____	_____

Table 3-5 Resistance for Each Gauge of Copper Wire

Gauge	Ohms per 1000 Feet		Gauge	Ohms per 1000 Feet	
0000	0.0489		10	0.9968	
000	0,0617		11	1.257	
00	0.0778		12	1.5849	
0	0.098		13	1.9987	
1	0.1237		14	2.5206	
2	0.156		15	3.1778	
3	0.1967		16	4.0075	
4	0.248		17	5.0526	
5	0.3128		18	6.3728	
6	0.3944		19	8.0351	
7	0.4971		20	10.1327	
8	0.6268		21	12.7782	
9	0.7908		22	16.1059	

Seismic Anchoring for a Cisco Rack

This section describes how to install the Cisco cabinet with the optional stability plate for seismic anchoring. If you have no stability plate, go to Chapter 4, “Enclosure and Card Installation.”

To set up the Cisco cabinet with the stability plate, perform the following:

Step 1 Use the dimensions in Figure 3-3 to drill the holes for installing the stability plate.

Step 2 Remove the stability plate from the base of the Cisco cabinet. Save these nuts and bolts.

Step 3 With the user-provided anchoring bolts, attach the stability plate to the floor.

Step 4 Roll the Cisco cabinet over the stability plate as Figure 3-4 illustrates.

Step 5 Use the nuts and bolts from the shipping setup to secure the cabinet to the stability plate.

Figure 3-3 Stability Plate Dimensions

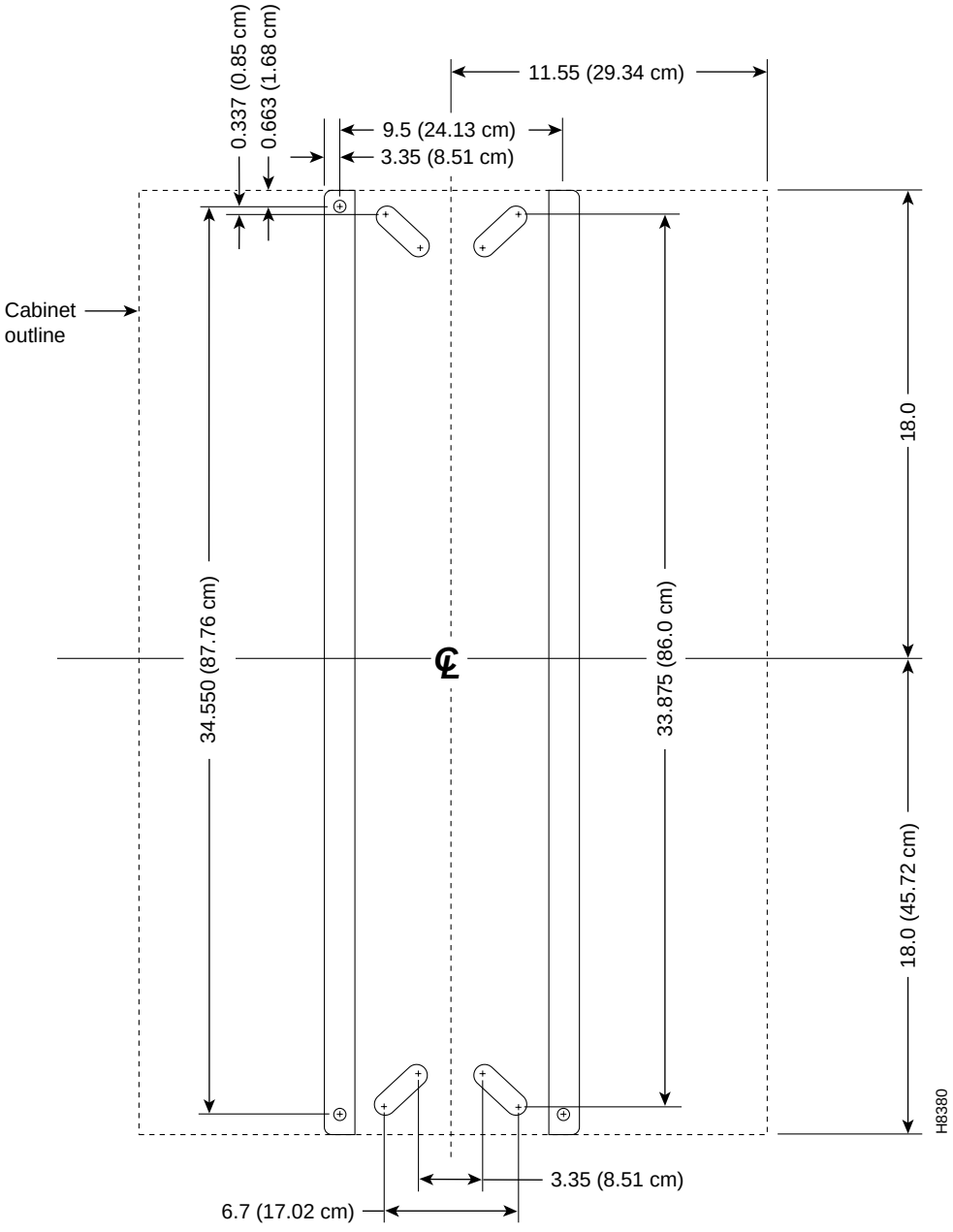

Figure 3-4 Installing a Cisco Cabinet Over the Stability Plate

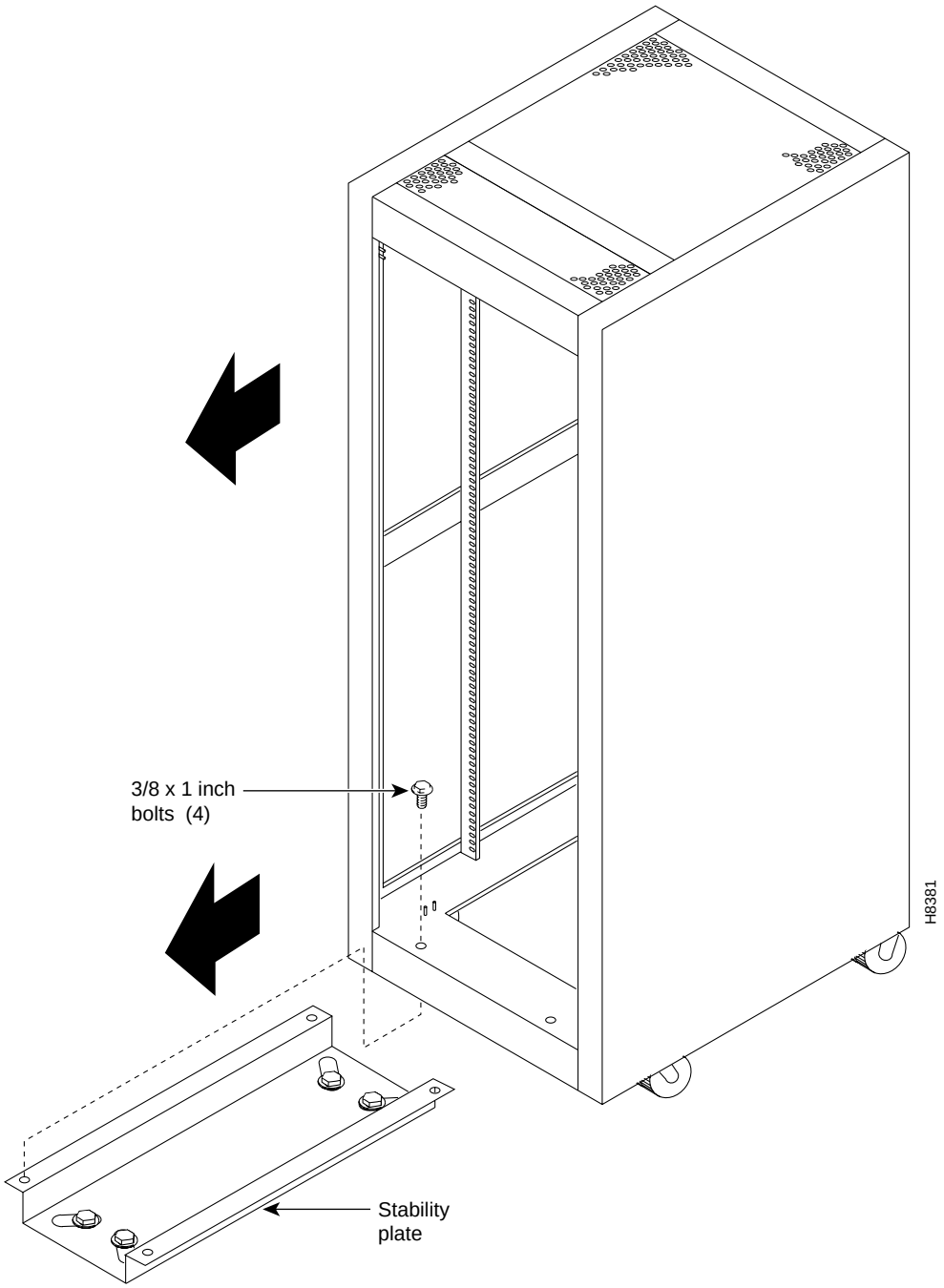

Making the Frame Bonding (Ground) Connection

This section describes the steps for making ground connections that comply with the Cisco MSSBU grounding policies. The descriptions cover optional ground connections from each switch to the ground connector of the rack as well as the equalization connections between racks that are part of the earth grounding network.

The Cisco-supplied cabinet has two pairs of grounding studs and the hardware for securing a ground conductor to the studs at the top and bottom of the cabinet. The studs measure 1/4" by 20 threads per inch. The studs can accept the two-holed grounding connector designed to prevent rotation and possible loosening of the connector. Figure 3-5 shows the Cisco cabinet with the ground attachment studs in the upper and lower parts of the cabinet. A ground symbol on the Cisco rack indicates the points of attachment.

Making Cisco Cabinet Ground Connections

Cisco recommends the following steps for attaching a ground conductor to the frame of a Cisco rack:

Step 1 Place an external, toothed star washer onto the stud.

Step 2 Place the connector terminating the grounding conductor closed-loop ring or two-hole compression fitting onto the stud.

Step 3 Place another external, toothed star washer or lock washer onto the stud.

Step 4 Screw a nut onto the threaded stud.

Figure 3-5 Frame Bonding Connection in Cisco-Supplied Rack

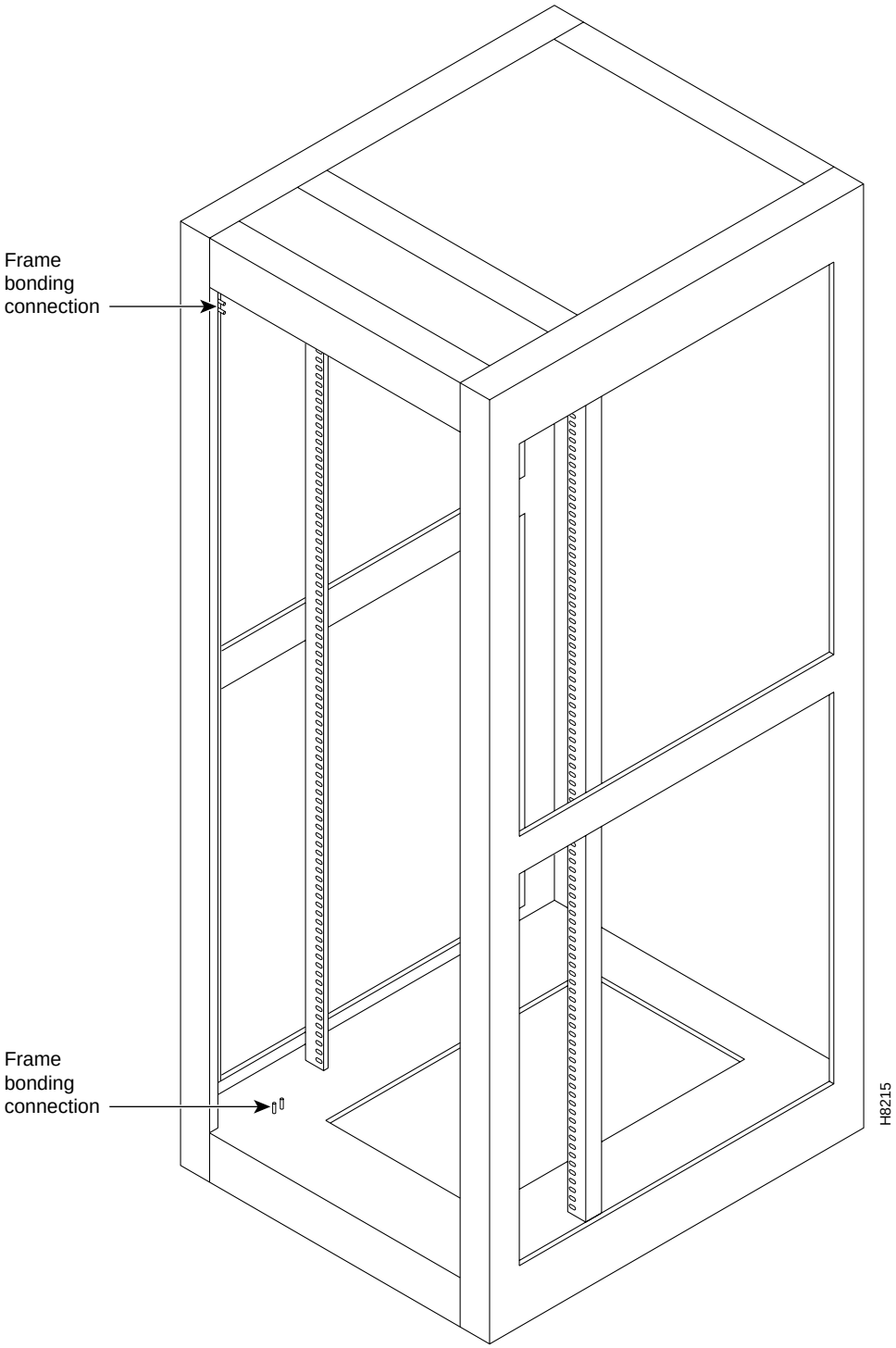

Using the Electrostatic Wrist Strap

The MGX 8250 switch ships with a wrist strap for grounding the user and protecting the electronic components from electrostatic shock. The wrist strap kit consists of a strap, a coiled cord, and a clip for holding the strap.

Cisco recommends you install the base of the wrist strap cable on the left front flange of one of the units at a convenient height. Use a front mounting screw to secure the ring lug to the flange and front rail. The other end of the cord connects to the strap with a snap connector. Peel the back off the clip to expose the adhesive surface and attach to the front of the unit above the ring lug. Mount the clip sideways to allow the strap to be held in a position that will not interfere with the removal of the number card. Use the clip to store the strap.

Co-Locating Cisco Units in the Same Rack

Different Cisco products can reside in the same rack. If a multi-system rack configuration includes an MGX 8600 series switch, it should reside as the bottom unit.

CHAPTER 4

Enclosure and Card Installation

This chapter describes how to install the hardware components that make up an MGX 8250 switch.

Note Most of the information in this chapter applies to an open rack installation. For a Cisco rack, you need only the instructions that apply to electrical connections. Information about the Cisco rack itself appears in Chapter 3, "Site Preparation."

Although the viewpoint of this chapter is that a plan exists for the network and the location of each card, it reviews some of the planning decisions for the switch. For a list of physical and electrical characteristics of the switch, see Appendix A, "System Specifications."

Introductory Information

The MGX 8250 switch ships in one of two arrangements:

- In pieces for installation in an open rack, which necessitates extensive installation instructions
- Pre-installed in a Cisco cabinet, which necessitates minimal installation instructions

Note the following information before installing anything:

- The card cage ships with cards and power modules installed and tested according to customer specifications. For an *open rack* installation, Cisco recommends that you remove the components before installing the switch because of the weight of the switch and the likelihood that a mechanical lift is not available. Therefore, the instructions begin with steps for removing cards and power modules on the assumption that no mechanical lift is available.
- High-speed, single-height service modules should be in the upper slots.
- Be sure to record the locations of all components.
- The maximum number of MGX 8250 systems you can fit in a standard rack is two. For special applications a low-profile DC-only configuration is available for installation with up to three low-profile systems in a 7-foot or larger rack. See the "MGX 8250 Low-Profile System with DC Power Supply" section on page 4-24 for more information.

Note The low-profile configuration cannot be upgraded using later versions of the MGX 8250 boards.

- If the installation includes a BPX 8600 series switch, it must reside at the bottom of the rack.

Installation Tools

The installation tools are:

- Small and medium-size flat-blade and phillips screwdrivers and optional powered screwdriver.
- Optionally, a mechanical lift is helpful, but a virtual necessity if only one person is installing the switch, due to the weight of the card cage.

Figure 4-1 19-inch Rack Mounted DC-Powered MGX 8250 Switch

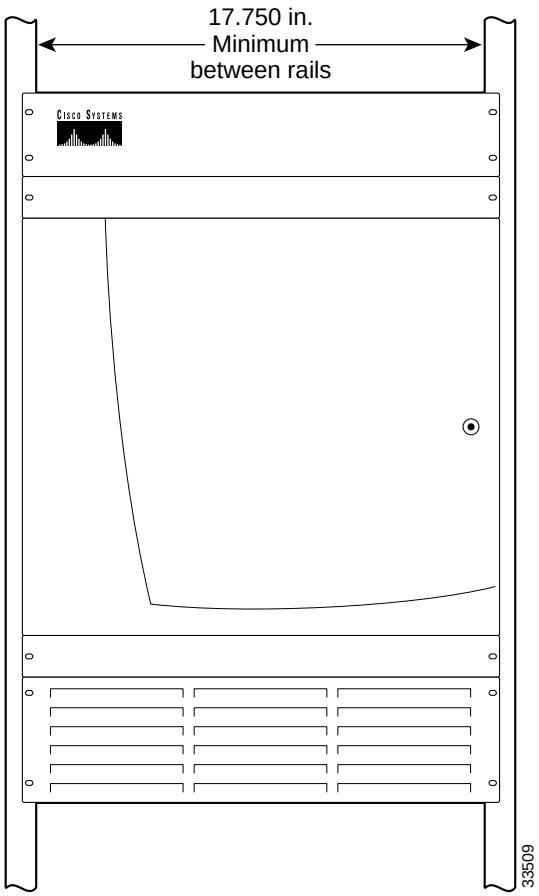

Mounting Rails for the Enclosure Modules

The minimum distance between left and right mounting rails as you face the rack is 17.75 inches or 45.08 cm. (The width of the enclosure modules such as card cage, fan tray, and so on, is 17.73 inches.) If a standard 19-inch (48.25 cm) rack cannot provide this space, a 23-inch rack is necessary. Each module has flanges that serve as the front mounting brackets in a 19-inch rack. For a 23-inch rack, Cisco Systems provides special brackets. The 19-inch rack version appears in Figure 4-1.

You can attach the enclosure modules to the mounting rails at the front, using the front flanges on each module. The flanges are visible in Figure 4-1.

- Approximately at the switch's midpoint: attach brackets to the modules, then attach the modules to mounting rails. For 23-inch racks, use the special extension brackets.

The mounting rail locations comply with sites that require mounting on front, middle, and rear mounting rails, as Figure 4-2 shows.

Figure 4-2 Mounting Rail Distances

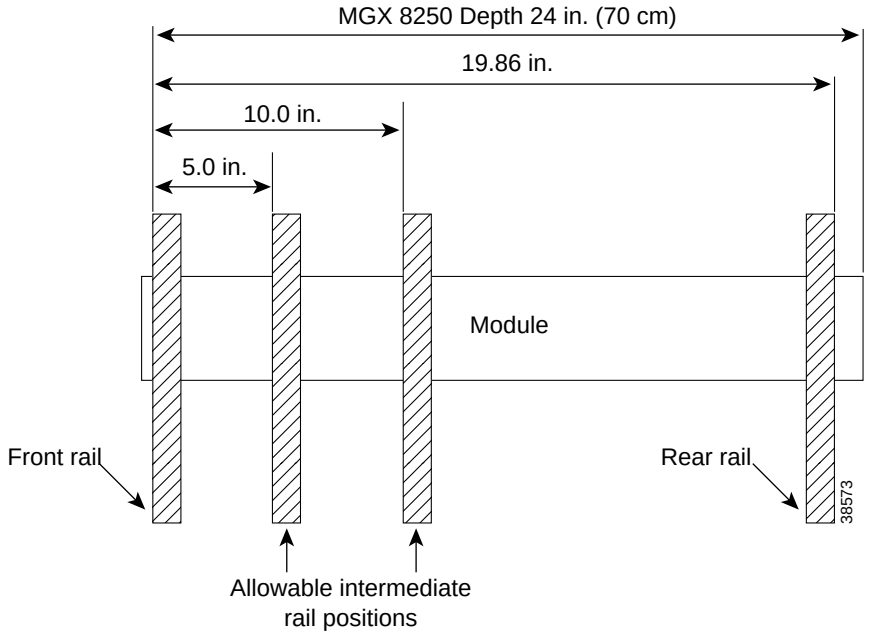

Considerations for Mounting the MGX 8250 Modules

This section describes how to install the mandatory and optional modules that make up the enclosure of the MGX 8250 switch. For open rack installations, Cisco advises you to remove the cards and optional AC power supplies before installing the switch. Therefore, this section begins with the steps for removing and installing these items.

When you install the modules, keep in mind the following:

1. Due to the presence of a disk drive on each Processor Switching Module (PXM), you should leave the PXMs in place. If you remove a PXM, handle it with caution to preserve disk alignment.
2. For an AC-powered, mid-mount rack installation, you must remove the AC power supplies.
3. The weight and bulk of even an empty card cage mandate that two or more people install it, otherwise one person with a mechanical lift can install the switch.
4. As you place each module in the rack, be sure that it does not drag across the surface of the module beneath it. Therefore, as you move it into position toward the back of the rack, lower the module to rest only when it is all the way in the rack and directly above the module beneath it.
5. The vertical spacing between all modules must be in the range .047"–.077" (about 1/16") or 0.119 cm–0.196 cm. By leaving this space, you can easily remove a single module if necessary. This clearance is not necessary beneath the exhaust plenum.
6. Two installers can maneuver a module to provide the vertical gap while driving in the first two screws. If you alone are installing the modules, use a *non-abrasive* object to create this gap until you have installed the screws. For the modules that have four or eight screws, two people are required only until the bottom two screws are in place.
7. If an enclosure module takes more than two screws, install the two bottom screws first.

8. If space around a mid-mount installation is too narrow, you can use thread-forming screws to pre-thread mounting holes. The pre-threaded holes make screw insertion much easier.

Caution If you use a power-screwdriver, do not use it on captive screws.

Caution When moving a Cisco-supplied cabinet, do not push the cabinet at its sides. Instead, grip its front or back edges.

Caution Make sure that mounting the equipment does not create a hazardous condition due to uneven mechanical loading. The rack should be securely supported.

Caution The location of the rack must allow air to flow unrestricted in and out of the switch.

Warning **Before handling any cards, ground yourself to the card cage with a wrist strap.**

Sequence for Installing the Switch

The information in the section applies to only an open rack installation. It identifies the installation sequence for the switch in general. For the sequence of enclosure modules in particular, see "Stacking Order for Enclosure Modules."

The installation sequence is:

Step 1 Remove all cards (except the PXMs) and the power supplies according to the instructions in "Removing a Front Card," "Removing a Back Card," and "Removing a 220 VAC Power Supply."

Step 2 Install enclosure modules in the order listed in 'Stacking Order for Enclosure Modules" and according to the instructions in "Installing the Enclosure."

Stacking Order for Enclosure Modules

A specific stacking order is mandatory. The following stacking order list begins with optional brackets then continues with the bottom module through the module at the top of the enclosure. Each of these modules has its own section with detailed installation steps. See Figure 4-3 for the location of each module.

1. Optional spacers for 23-rack installation
2. Optional AC power assembly
3. Air intake chamber
4. Lower spacer unit or optional lower fan tray

5. Card cage
6. Upper (mandatory) cooling unit fan tray
7. Exhaust plenum

Figure 4-3 Component Locations in a 220 VAC-Powered MGX 8250 Switch

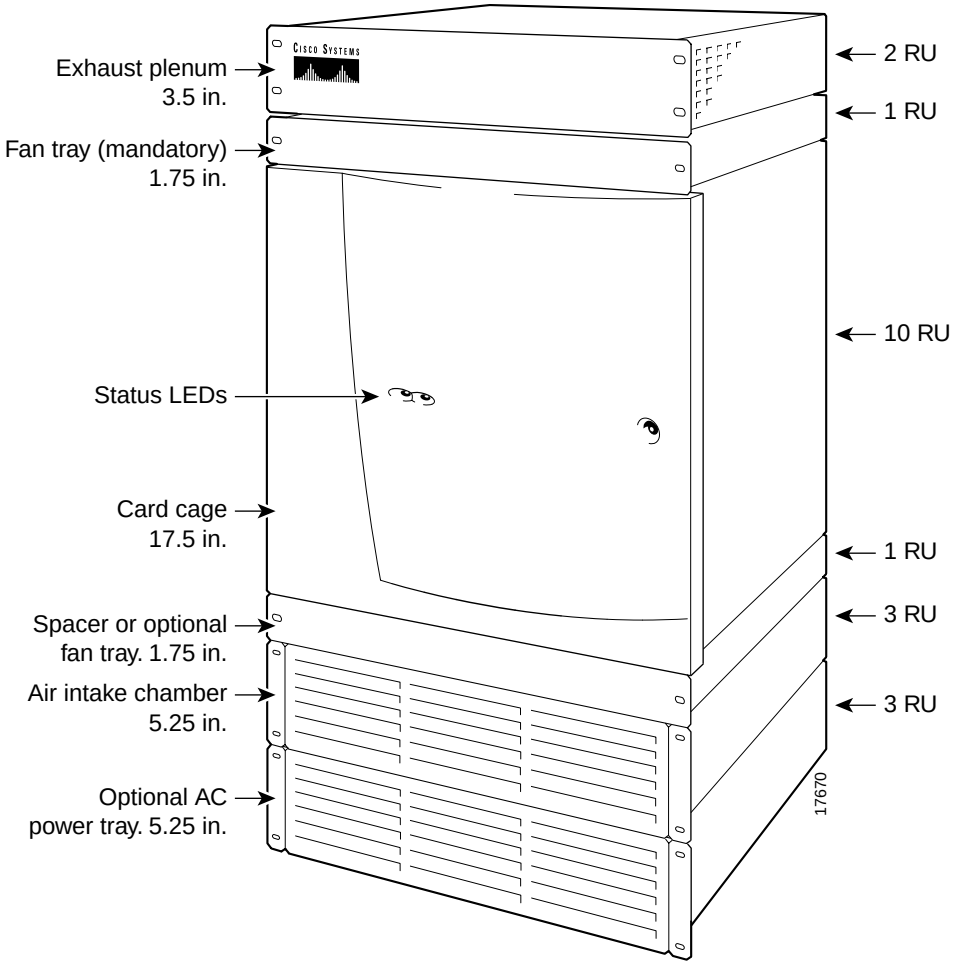

Removing a Front Card

Each single-height front card has a latch to secure it when the card connects to the backplane. Each double-height card has a latch at the top and the bottom. (See Figure 4-4.)

Figure 4-4 Front Card Insertion/Extractor Latch

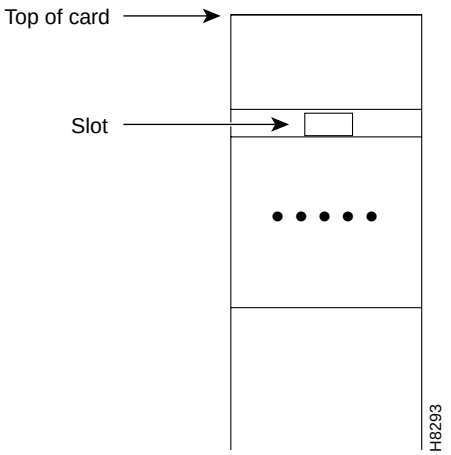

To remove a front card:

Step 1 Press the tip of a small, flat-blade screwdriver into the slot of the insertion/extractor lever until the latch springs open by approximately 10 degrees. For double-height cards, repeat this action at the bottom latch.

Step 2 To dislodge the card from the connector, lift the lever.

Step 3 Gently pull the card out of the card cage.

Removing a Back Card

A screw at the top and bottom of the faceplate of each back card (or line module or port adapter) secures the card in its backplane connector. The extraction levers let you pull the card from the backplane connector after you loosen the screws.

To remove a back card:

Step 1 Use a flat-blade screwdriver to loosen the two retaining screws in the faceplate.

Step 2 Simultaneously pull out both extractor levers to pull the card from the backplane connector after you loosen the screws.

Step 3 Gently pull the card out of the card cage and store it in a safe location.

Removing a 220 VAC Power Supply

Removing 220 VAC power supplies makes the AC power tray installation much easier. For a mid-mount installation, however, you must remove the power supplies for reasons explained in the forthcoming section “Installing the Enclosure.” Before executing the following steps, make sure you have a record of the location of each power supply.

Step 1 Remove the air intake grille by inserting a flat-blade screwdriver in the access hole at the top then rotating the screw until the spring latch opens. See “Release” in Figure 4-5.

Figure 4-5 Removing a 220 VAC Power Supply

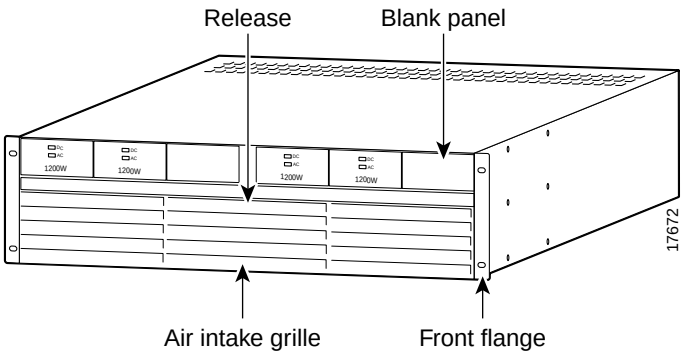

Step 2 Tilt the air inlet grille down to about a 45-degree angle, then lift it out and set it aside. This action exposes the hinged door that serves as the power supply retainer bracket.

Step 3 With a flat-blade screwdriver, unscrew the captive retainer screw in the center of the hinged door and tilt the door down.

Step 4 Loosen the captive screw at the front-bottom of the power supply you want to remove. (See Figure 4-6.)

Step 5 Grip the handle, then remove the supply.

Figure 4-6 AC Power Supply

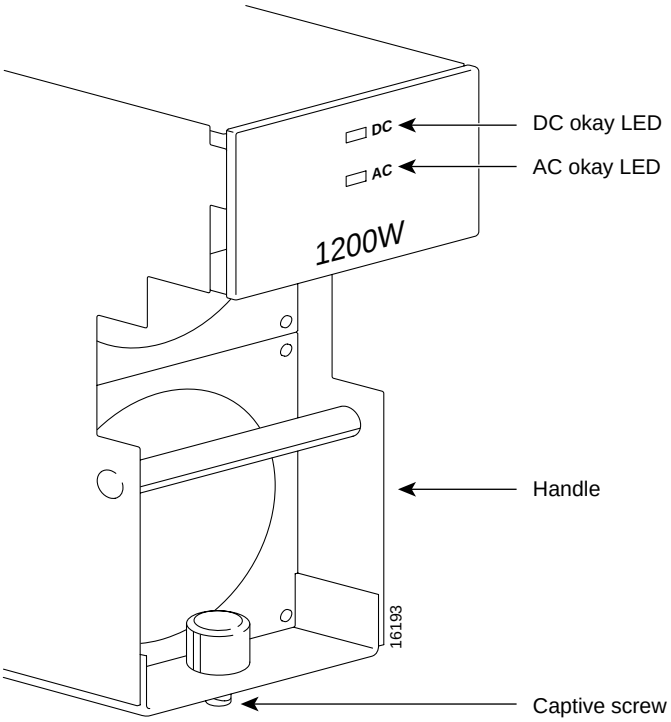

Installing the Enclosure

Using the guidelines in "Introductory Information," install each component according to the steps in this section. The section contains descriptions for the enclosure modules and includes descriptions for the power cables and cable manager.

Step 1 If this switch requires the brackets for a 23-inch rack, attach them to the enclosure modules.

Step 2 For an AC-powered system, install the optional AC power tray. Its height is three rack-mount units (three RUs are 5.25 inches or 13.34 cm). See Figure 4-7.

For a mid-mount installation, insert each mounting screw from the inside the power tray so that the nut is on the outside of the tray. This approach is necessary to allow room for power supplies in either the first or last power supply trough.

Figure 4-7 Optional 220 VAC Power Tray

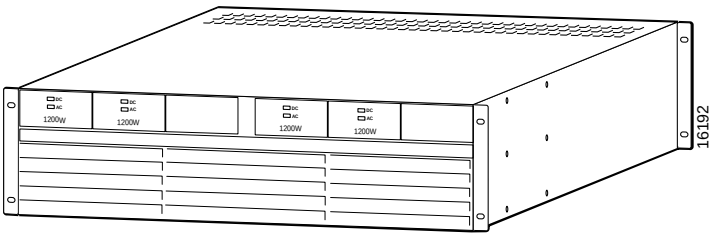

While you secure the front of the power supply tray with the front screws, hold the adjacent front flange of the tray slightly to the outside so the hinged door can freely open and close. See "Front Flange" in Figure 4-5. The space between the right-angle edge of the flange and the edge of the hinged door should be about the thickness of a thumbnail.

Step 3 For a DC-powered system, install the DC-PEMs at the back of the air intake module. If you install only one DC-PEM, install it on the right. (See Figure 4-8 and Figure 4-9.)

Figure 4-8 DC-PEM

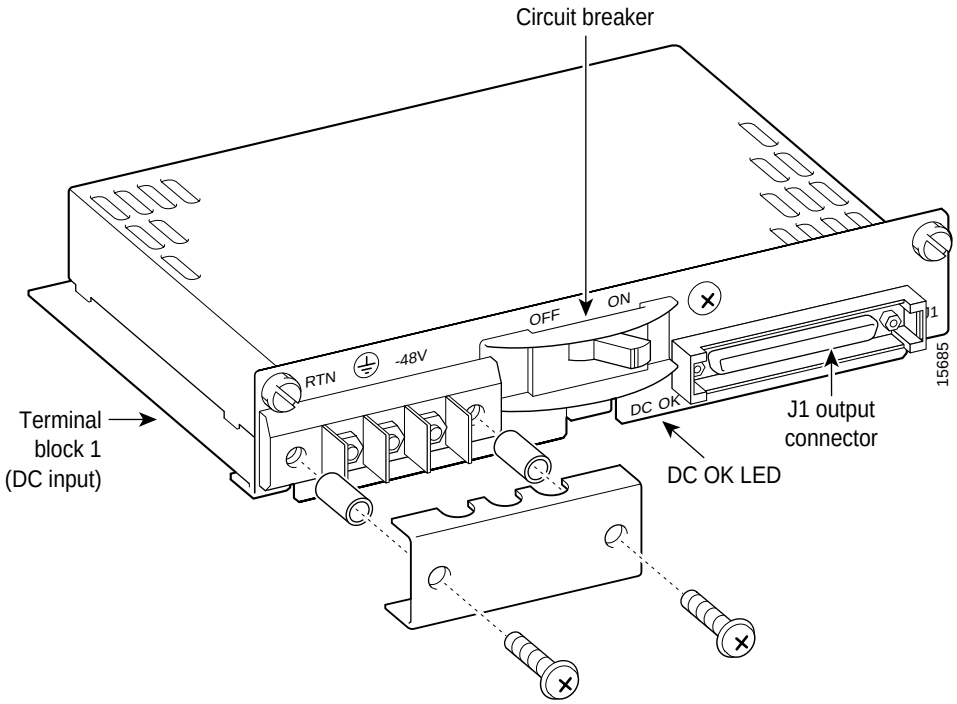

Figure 4-9 DC-PEMs Installed in Back of the Air Intake Module

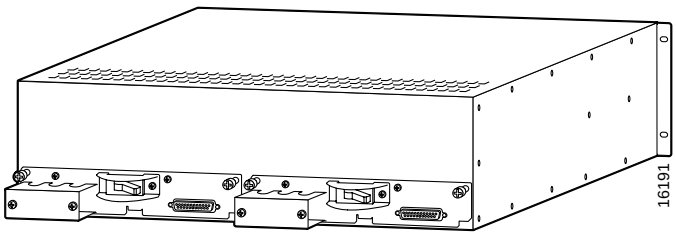

Step 4 Install the air intake module (3 RUs). (See Figure 4-10.)

Figure 4-10 Air Intake Module

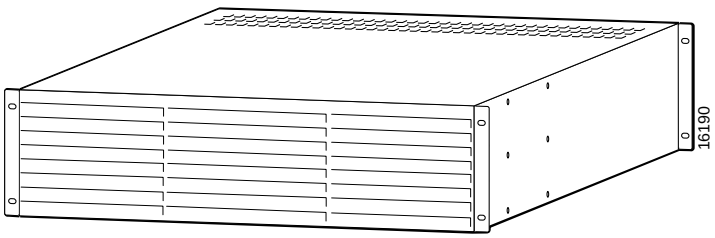

Step 5 Install the optional booster fan tray if present, otherwise install the spacer unit (1 RU). See Figure 4-11. If you install a fan tray, note the label that says “This Side Up.”

Step 6 Install the card cage (10 RUs). When you move the card cage into position, be sure the base of the card cage at the back fully clears the top-rear edge of the spacer unit or fan tray beneath it.

Step 7 Install the mandatory fan tray (1 RU). See Figure 4-11, and note the label that says "This Side Up." When you move the fan tray into position, make sure its base at the back fully clears the top-rear edge of the card cage beneath it.

Figure 4-11 Fan Tray

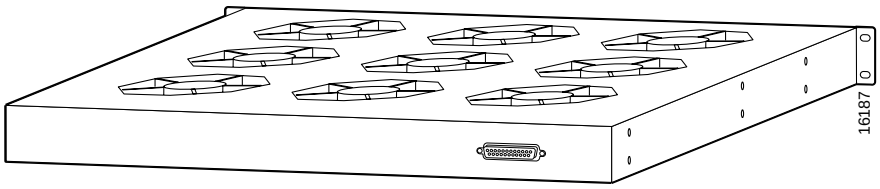

Step 8 Install the exhaust plenum (2 RUs).

If you install the cable manager, proceed to the next section, titled "Installing the Cable Manager," before you do the tasks in the section titled "Installing the Fan Power Cabling."

Installing the Cable Manager

The cable management system consists of two identical cable managers, left- and right-side mounting brackets, and screws. First, attach the mounting brackets according to the steps that follow.

Step 1 Holding the bracket with one hand, position it so the lower flange fits inside the card cage wall. Make sure the screw hole on the bracket aligns with the screw hole on the card cage.

Step 2 Drive in the screw.

Next, use the provided 10-32 sized screws to install the cable managers. As Figure 4-12 shows, the orientation of the cable managers must be such that the cable channels on the top cable manager are on top, and the cable channels on the bottom cable manager are on the bottom.

Note Fiber optic cabling and copper cabling take different paths on the cable manager. Use the cable channels for the copper cabling, but run the fiber optic cables over the sheet metal portion.

Figure 4-12 Cable Management Assembly at Back Enclosure

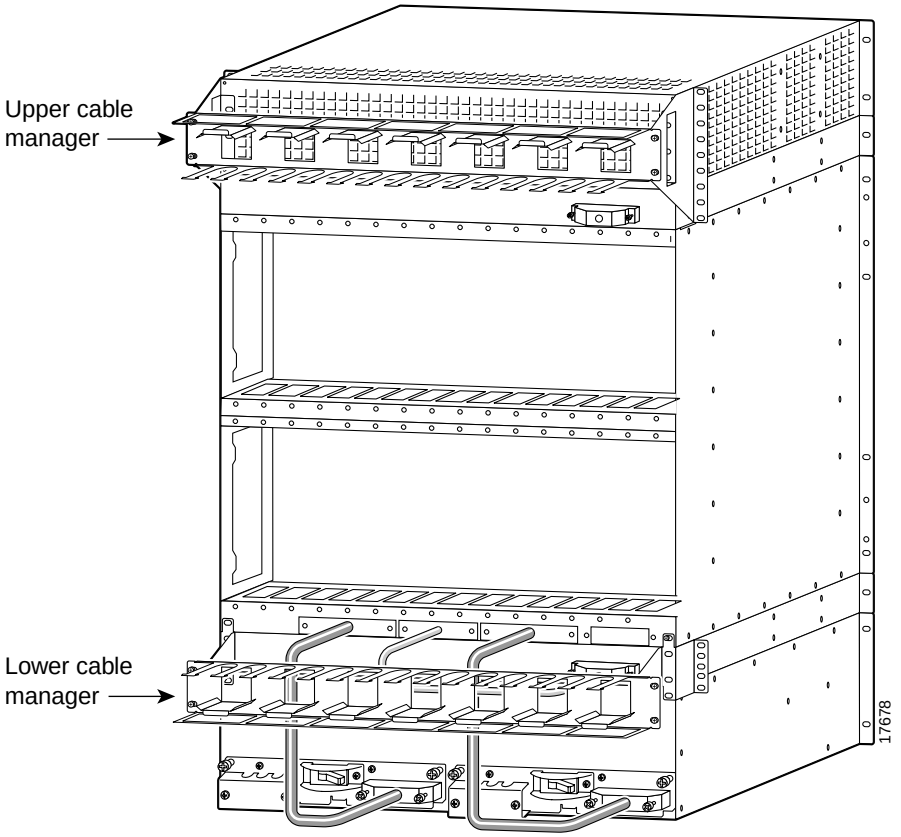

Installing the Fan Power Cabling

The fans receive power off the backplane by way of a fan power cable. To reach the backplane connector, the fan power cable D-connector passes through an outer hole at the base of the card cage. At the fan-tray end of the cable, the D-connector plugs into J1—the only connector at the back of the fan power tray. See Figure 4-13 for an illustration of the fan power cable and Figure 4-14 and Figure 4-15 for illustrations of the card cage area with the cabling holes for AC and DC-powered systems. Note that the holes for system power cabling alternate with the smaller holes for fan power. From left to right, the sequence of access holes is:

1. System power.
2. Fan power.
3. System power.
4. Fan power. Use the fan power access hole on the far right for the upper fan tray.

Figure 4-13 Fan Power Cable

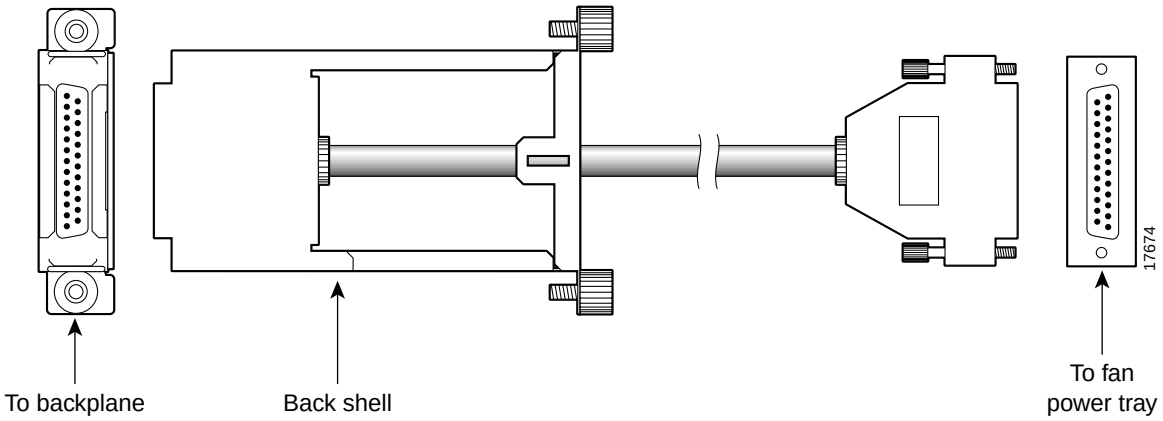

To install the fan power cabling:

Step 1 With the narrow row of pins shown in Figure 4-13 in the D-connector on the bottom, use two hands to slip the framed connector through the access hole at the base of the card cage. Move the connector straight toward the backplane so you can guide it through the second internal guide.

With the D-connector fully inserted in the backplane connector, the captive screws on the frame are clearly aligned with the threaded holes on the chassis.

Step 2 Tighten the captive screws only enough to secure the connector. Do not apply much torque, and do not use a power screwdriver.

Step 3 Insert the D-connector in J1 on the fan tray and tighten the captive screws only enough to secure the connector. Do not use a power screwdriver.

Step 4 For the mandatory fan tray, position its power cable to run through the channel formed by the mounting bracket on the right.

Figure 4-14 Access for Fan Power at the Backplane, 220 VAC-Powered Switch

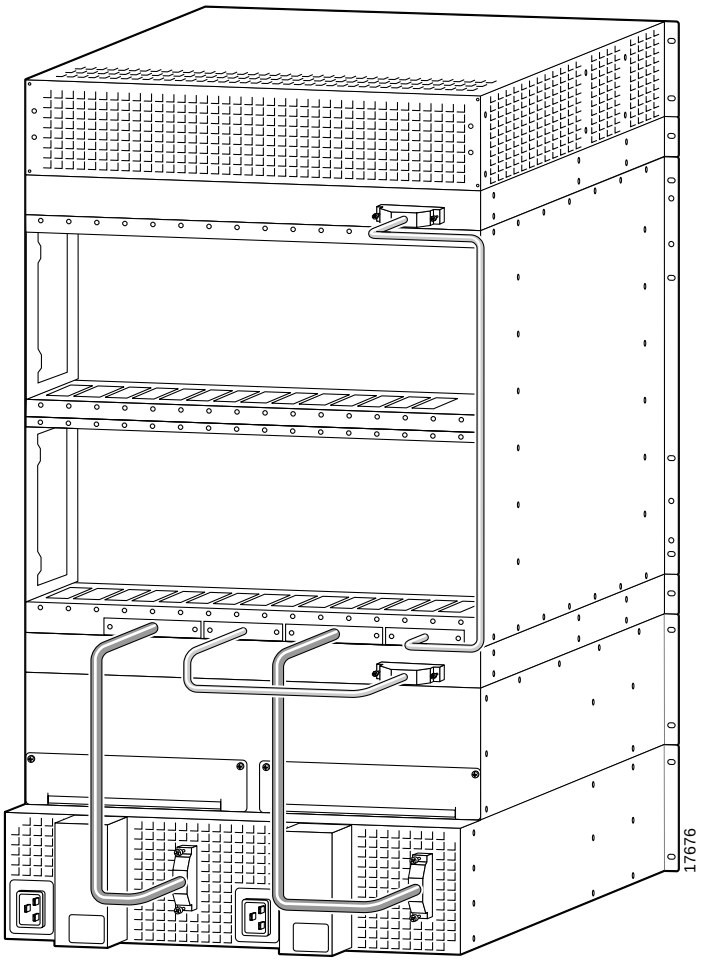

Figure 4-15 Access for Fan Power at the Backplane, DC-Powered Switch

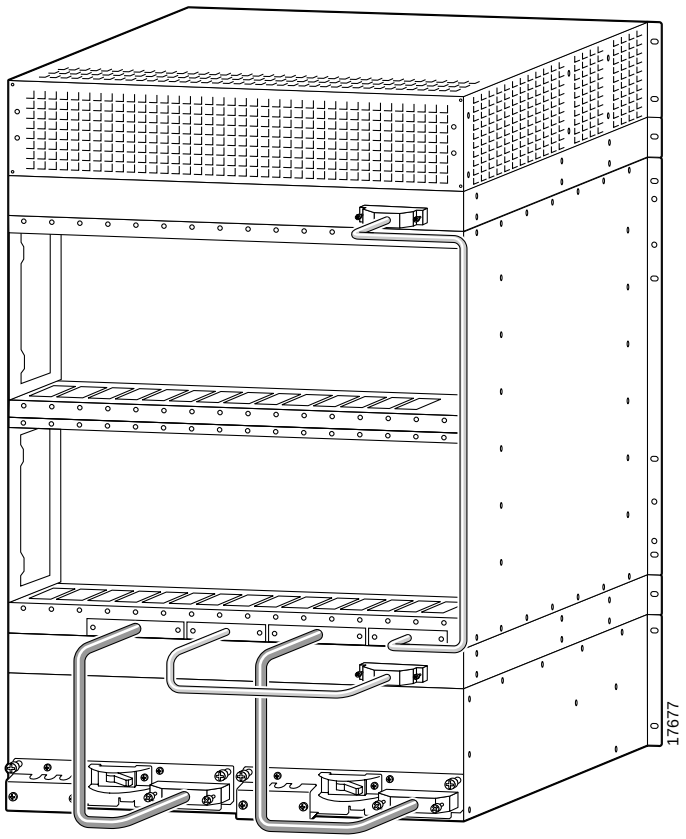

Installing the System Power Cabling

A system power cable carries current from either a DC PEM or AC-DC power module to the backplane. The cable is the same for either type of power system. (See Figure 4-16.)

The end with the metal frame around the D-connector plugs into the larger of the access holes to the backplane. The other end connects to the power supply and has a protective connector cover, shown in Figure 4-16, which prevents the possibility of shorting the DC power supply while the connector is removed. You will need to press the connector cover on the cable side to lift the cover away from the D-connector when installing the cable into the PEM.

From left to right, the first and third access holes are for system power. See Figure 4-17 for an AC-powered system and Figure 4-18 for a DC-powered system.

Figure 4-16 Cable Assembly for System Power

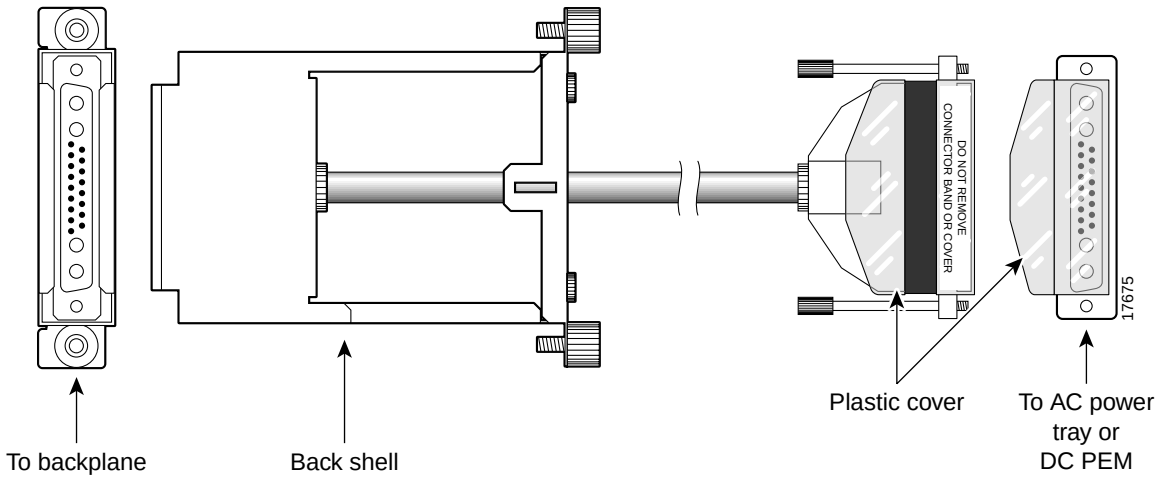

Figure 4-17 Access for System Power at the Backplane, 220 VAC-Powered Switch

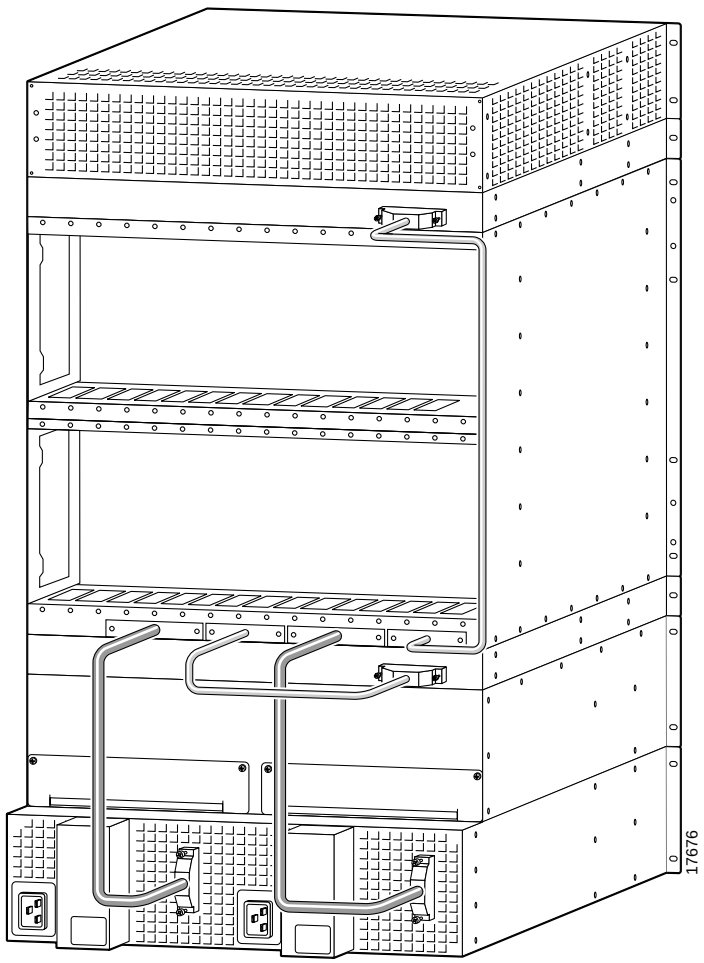

Figure 4-18 Access for System Power at the Backplane, DC-Powered Switch

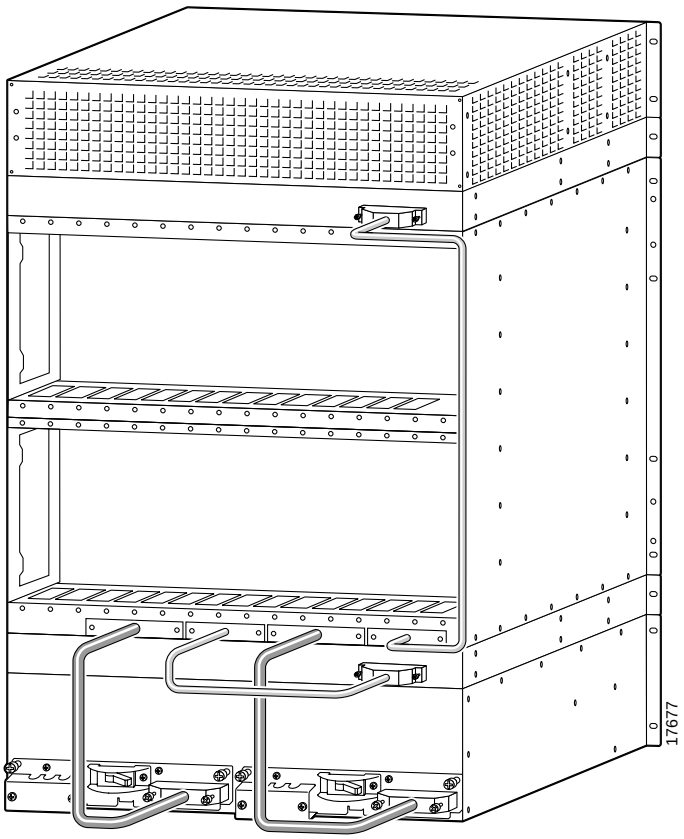

Both AC and DC-power assemblies have D-connectors to receive the unframed connector. Connecting a power cable at the backplane has no requirement to connect at a particular connector.

To install system power cabling:

Step 1 With the narrow row of pins in the D-connector on the bottom, use two hands to slip the larger connector through the access hole at the base of the card cage.

Step 2 Move the connector straight toward the backplane so you can guide it through the second, internal guide.

When you have fully seated the D-connector in the backplane connector, the captive screws on the frame are clearly aligned with the threaded holes on the chassis.

Step 3 Tighten the captive screws only enough to secure the connector. Do not apply much torque. Do not use a power screwdriver.

Step 4 Insert the D-connector without the frame in J1 on the power assembly

Step 5 Tighten captive screws only enough to secure the connector. Do not use a power tool.

If you need to swap a DC PEM in a redundant system with the power on, see “Swapping a Primary or Redundant DC PEM With Power On” for instructions.

Swapping a Primary or Redundant DC PEM With Power On

If necessary, you can replace either a primary or a redundant PEM with power on. To avoid possibly tripping the system circuit breaker in the process, use the sequence described in this section for disconnecting and reconnecting the system power cabling.

To remove a PEM with system power on:

Step 1 Turn off the circuit breaker on *only* the PEM you intend to replace.

Step 2 Turn off the branch circuit at the DC source (the distribution box, for example) for the correct branch.

Step 3 Disconnect the three DC source wires at the wiring block on the PEM.

Note The following Caution and Steps 4 through 6 only apply to earlier builds without the plastic protector cover on the cable connector plugged into the PEM. If you are using a cable connector with the plastic protector cover, proceed to Step 7.

Caution The cable connector must be disconnected at the backplane end during hot PEM insertion or removal.

If you disconnect the cable first at the PEM, the system power cable is still hot. These hot contacts may inadvertently touch a surface of the chassis or metal connected to the chassis. If this contact occurs, the –48 VDC is shorted to the chassis, and the circuit breaker on the still-active PEM open shutting down the system.

Step 4 Locate the backplane end of the system power cable for the PEM you intend to replace.

Step 5 At the backplane end of the system power cable, loosen the captive screws on the cable bracket.

Step 6 Pull the cable bracket out approximately one inch to disconnect the cable.

Step 7 At the end of the system power cable connected to the applicable PEM, loosen the jack screws and disconnect the cable from the PEM.

Step 8 Remove the PEM.

To install a PEM in a system with power on:

Step 1 Make sure the circuit breaker is in the off position.

Step 2 Insert the PEM and tighten the captive mounting screws.

Step 3 Connect the system power cable first at the PEM.

Note Step 4 only applies if you disconnected the backplane connector in Step 4 of the previous procedure; otherwise, proceed to Step 5.

Step 4 Connect the backplane end of the system power cable to the backplane. This requires some dexterity, especially if the cabling around the system power cable is dense. Grasp the cable bracket at the captive screws and gently push the bracket straight in. Furthermore:

- To align the pins of the backplane and cable pins, move the cable connector slightly up and down or side to side until the connectors are aligned and able to mate.
- When executing this step, keep the bracket as level as possible.
- The connector is fully inserted when the connector shell (housing) easily moves all the way into the enclosure hole and the exterior of the shell with the captive screws is fully flush with the enclosure.

Step 5 Tighten the connector screws.

Step 6 Attach the three DC source wires at the wiring block on the PEM.

Step 7 Turn on the DC power at the circuit branch source.

Step 8 Turn on the circuit breaker of the PEM.

Installing 220 VAC Power Supplies

If you left the AC power supplies in the tray during installation, proceed to the next section, "Connecting 220 VAC Power to the Switch." To re-install power supplies you have removed:

Step 1 Push each power supply into the tray. When it almost reaches the end of the slot in the tray, a slight resistance is encountered. Push the power supply slightly farther in to achieve the final position and full connector mating.

Step 2 Secure each supply to the tray by tightening the captive screw at the bottom-front of each supply. For slots without a power supply, the hinged door on the tray should have a removable, blank panel.

Step 3 Close the hinged door and secure it with the screw at the top-center of the door.

Connecting 220 VAC Power to the Switch

If you removed the AC power supplies before installing the AC power tray, re-install them in the same locations they had when the switch arrived. If necessary, use the steps in the section titled "Installing 220 VAC Power Supplies." At the switch, the AC power receptacle is an IEC-type with a clamp.

Note The AC voltage range is 200–240 VAC.

To install the power cord:

Step 1 Loosen the cable clamp around the receptacle, otherwise the plug may not properly fit.

Step 2 Firmly seat the plug. This may require you to hold the chassis with one hand while you push the plug in with the other hand.

Step 3 Tighten the clamp.

Cisco can provide AC power cords with the following types of AC wall plugs:

- 20 A NEMA L620, 3-prong plug (domestic U.S.)
- 13 A 250 VAC BS1363, 3-prong fused plug (UK, Ireland)
- CEE 7/7 (Continental Europe)
- AS3112 (Australia and New Zealand)
- CEI23-16/VII (Italy)

Installing 110 VAC Power Supplies

If you left the 110 VAC power supplies in the tray during installation, proceed to the next section, “use the following procedure to re-install power supplies you have removed:

Step 1 Loosen the captive screw at the top of the AC Power Supply Module that secures it to the AC Power Supply Tray.

Step 2 Insert the AC Power Supply Module.

Step 3 Tighten the captive screw at the top of the AC Power Supply Module.

Step 4 Attach the DC power cable.

Step 5 Attach the AC power input cable.

Step 6 Turn the AC source power on.

Step 7 Turn the Enable switch on the AC Power Module to On.

Step 8 From the front of the MGX 8250, verify that both LEDs (AC and DC) on the replacement AC Power Supply Module are lit.

Connecting DC Power to the Switch

This section describes how to connect the DC wiring to the switch. This switch uses 6 AWG (10 square mm) copper wire. For details on wire lengths, wire gauges, and grounding concerns, see Chapter 3, “Site Preparation.”

Each primary or redundant DC source connects to one or two DC PEMs in the switch. Make sure that each source comes from a dedicated branch circuit. Only a source that complies with safety extra low voltage (SELV) requirements in AS/NZ 3260 and EN60950 should connect to a DC-powered switch. The wiring for a DC-powered system is provided by the customer and must be three-wire solid or stranded copper. Its insulation should be rated for 60 degrees centigrade.

The recommended terminal lug to be used with the DC PEM terminal block is Panduit LCAS6-10-L.

For installations where protection conduit is not required by local codes, the plastic cover visible at the bottom of Figure 4-19 is sufficient. Two phillips screws secure this cover to the PEM.

Use the visual information in Figure 4-19 and Figure 4-20 to connect the DC wiring.

Step 1 Cut the appropriate wire lengths.

Step 2 Strip the insulation back 0.25 inches (6 mm).

Step 3 With power off at both the switch and the source, attach each wire to the #10-32 lugs. See Figure 4-20.

Figure 4-19 DC-PEM

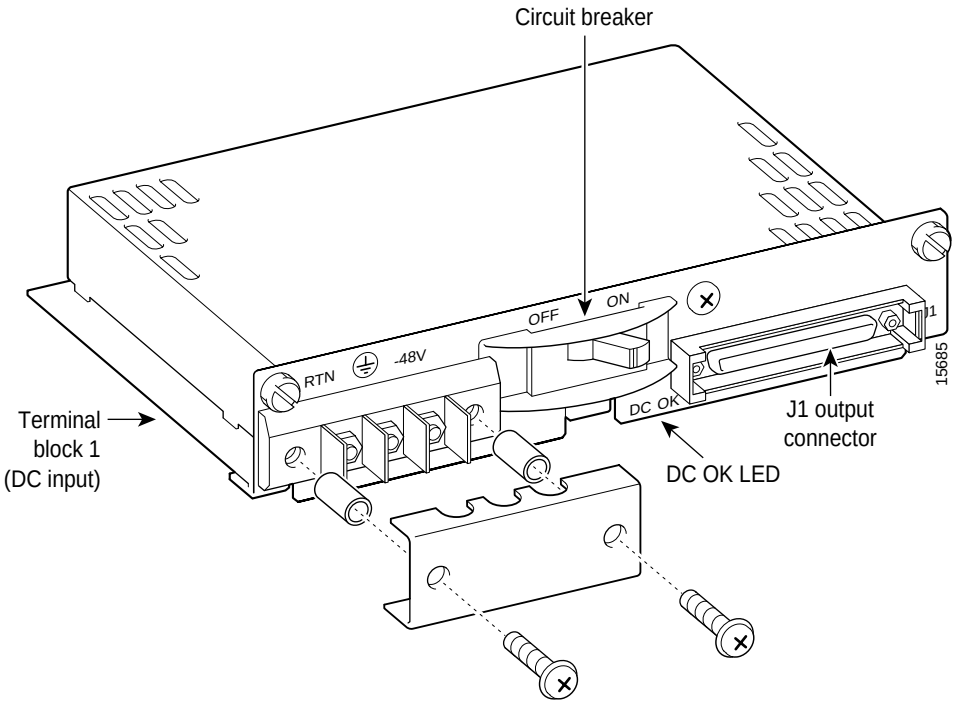

Figure 4-20 Placement of DC Wiring Lugs on the DC-PEM

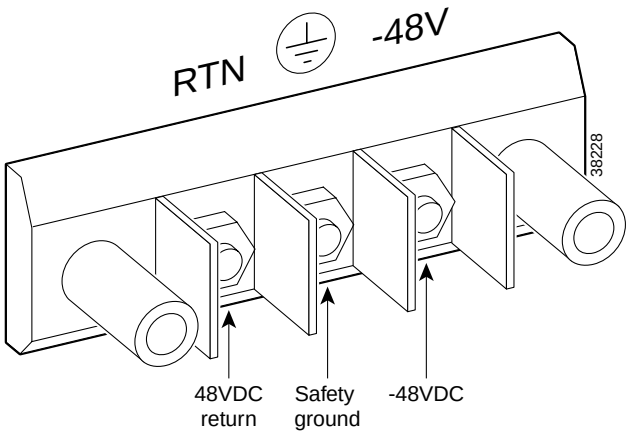

MGX 8250 with 110 VAC Power Supply

The version of the MGX 8250 powered by either a single or redundant 110 VAC power supply is shown in Figure 4-21. The version shown has the optional door installed.

The power supply will accept voltages in the ranges of 100 VAC to 130 VAC.

The 110V power supply has a maximum output power of 1200W per power supply module. However, because of safety limitations imposed on the line cord, the power is restricted to 1000 Watts output.

Configuration Limitations

The system is limited to using cards from release 1.4 and earlier. Cards in future releases are not supported by this system.

Figure 4-21 MGX 8250 with 110 VAC Power Supply

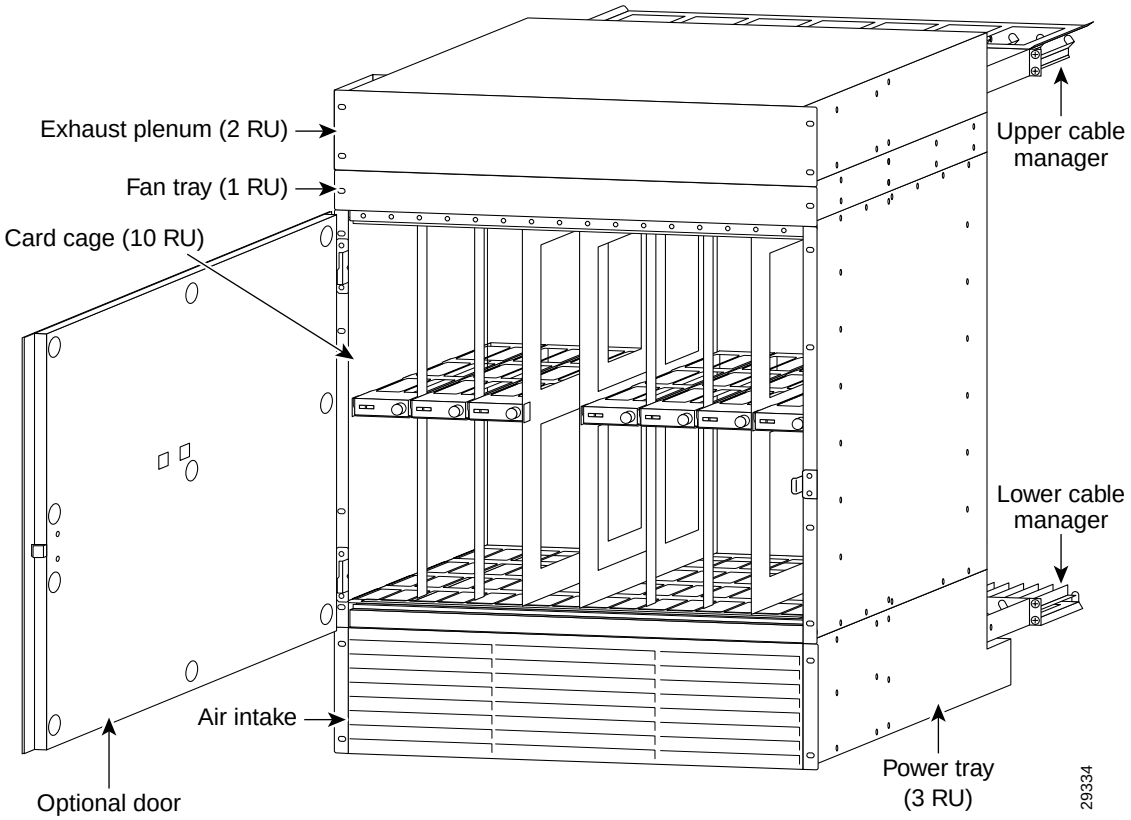

Note The low-profile 110 VAC version of the MGX 8250 has a combination air intake plenum and power supply tray.

Adding and Removing Cards to 110 VAC Switch

Since the card cage for the MGX 8250 low-profile AC version is identical to the standard MGX 8250 card cage, follow the procedures in the "Installing the Cards" section on page 4-26 for removing and installing cards.

Removing 110 VAC Power Supply

The 110 VAC power supplies are accessed from the rear of the unit as described in the following procedure. The front grill is not removable on this switch.

Step 1 Turn off the power switch on the power supply.

Step 2 Disconnect the AC input power cable from the power supply.

Step 3 Remove the DC power cable, shown in Figure 4-22 , from the power supply side, leaving the other side attached to the motherboard.

Step 4 Using a phillips screwdriver, remove the screw at the rear of the unit as shown in Figure 4-22

Step 5 Gently pull the power supply from the case toward the rear.

Figure 4-22 Removing 110 VAC Power Supply

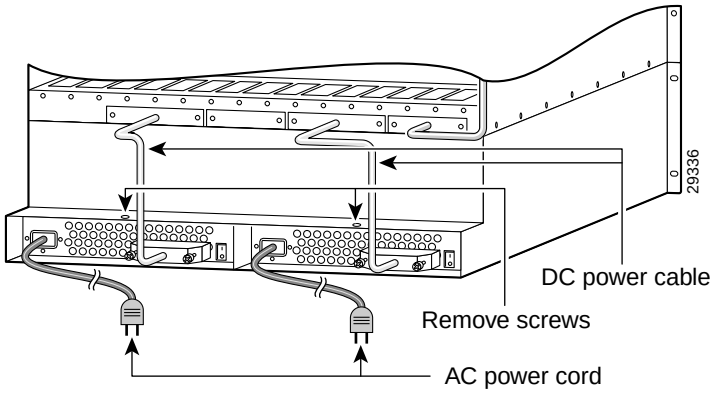

Replacing 110 VAC Power Supply

To replace a 110 VAC power supply refer to Figure 4-22 and use the following procedure:

Step 1 Slide the power supply into a vacant position and secure with the screw, shown in Figure 4-22, using a Phillips screwdriver.

Step 2 Connect the DC power cable to the power supply. Make certain the connectors are firmly seated.

Step 3 Secure the cable connector with the two connector screws using a phillips screwdriver.

Step 4 Connect the AC power cable to the power supply.

Step 5 Turn the power switch on the power supply to its on position.

This completes the removal and installation of the 110 VAC power supply.

Installing the Fan Power Cable

After the system has been mounted, connect the fan power cable to the mother board and to the fan power connector on the fan tray as shown in Figure 4-23. Route the power cable as shown in Figure 4-23.

Figure 4-23 Installing Fan Power Cable

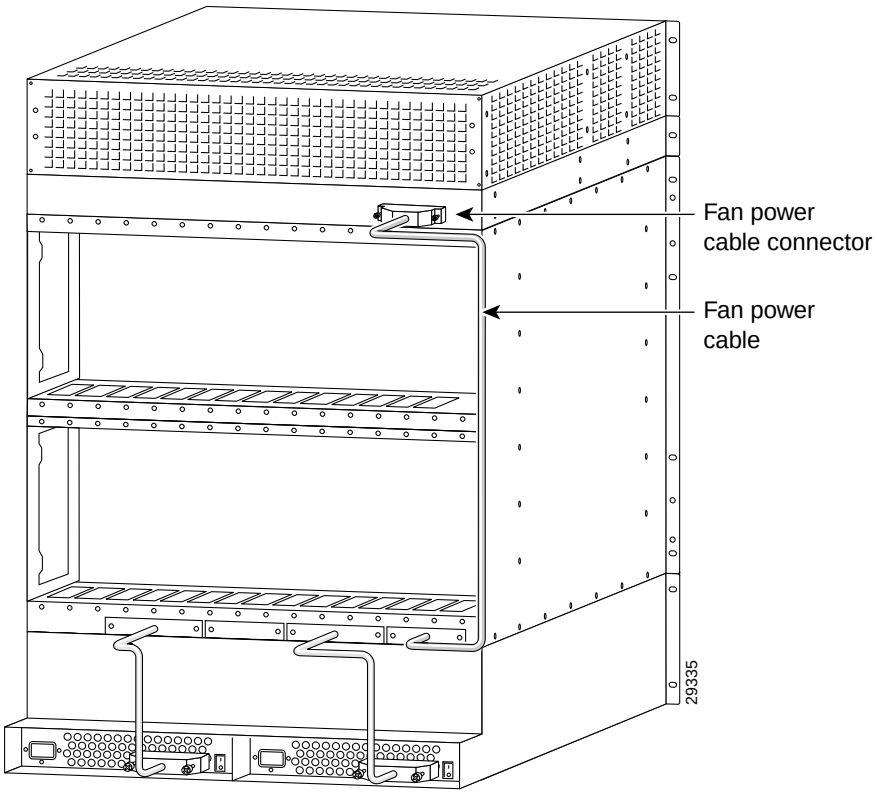

MGX 8250 Low-Profile System with DC Power Supply

The MGX 8250 low-profile, DC version is shown in Figure 4-24. Figure 4-25 shows the rear of the unit, the connections between the system motherboard and the PEMs, and the routing for the fan power cable. With the proper rack, up to 3 of these units can be placed in a standard 7-foot rack. The low-profile system is 15 RU high.

Configuration Limitations

The MGX 8250 low-profile system has thermal limitations that limit the type and number of cards that can be installed in the system to a maximum total power dissipation of 1000 Watts. The thermal limitations are due to having only a single fan tray available. See Table A-2 on page A-3 “Physical Characteristics and Power Consumption by Card” for detailed thermal information on the card content of a system. System software recognizes the system card and fan tray configuration and will issue an error message if the thermal limitations are exceeded.

The MGX 8250 low-profile system supports cards of Release 1.4 and earlier but will not support cards for future releases.

Figure 4-24 MGX 8250 Low-Profile DC Version, Front View

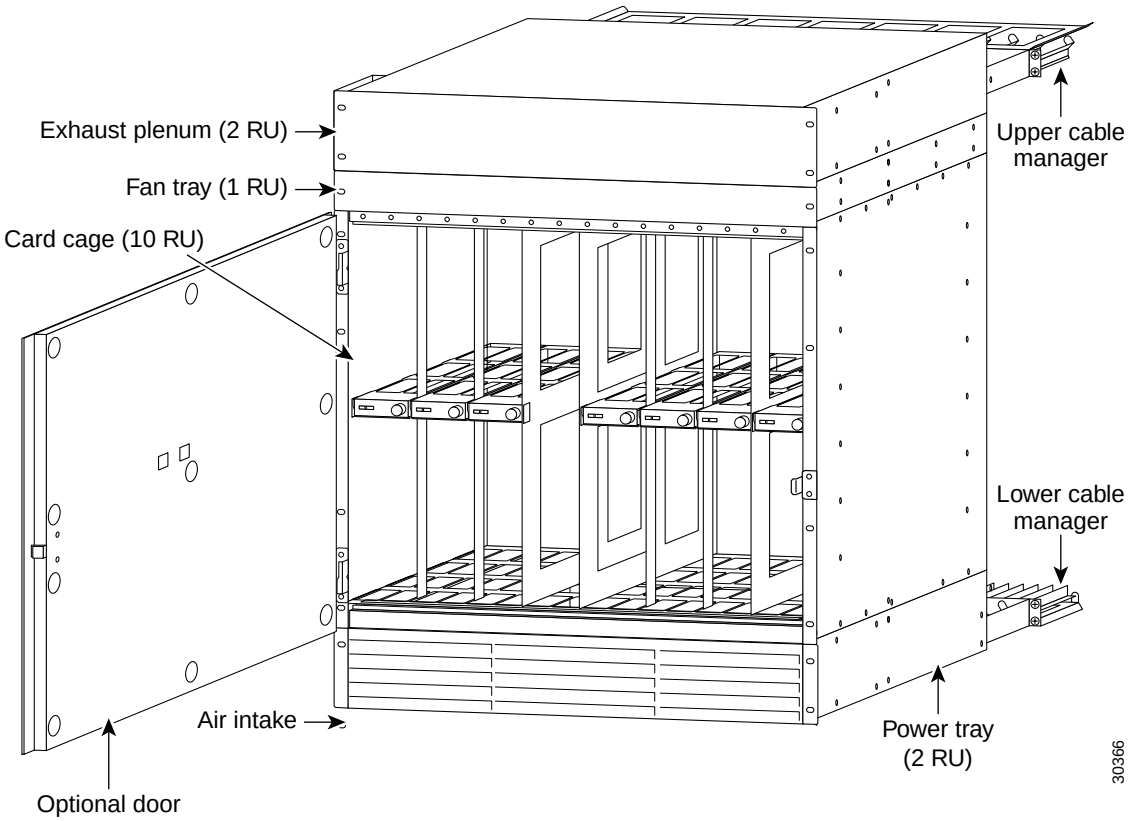

Adding and Removing Cards in the MGX 8250 Low Profile DC Version

Adding and removing cards in the card cage for the low-profile DC version of the MGX 8250 is identical to the procedure described in the "Installing the Cards" section on page 4-26. Follow this procedure for installing and removing cards.

Figure 4-25 MGX 8250 Low-Profile DC System Power Connections

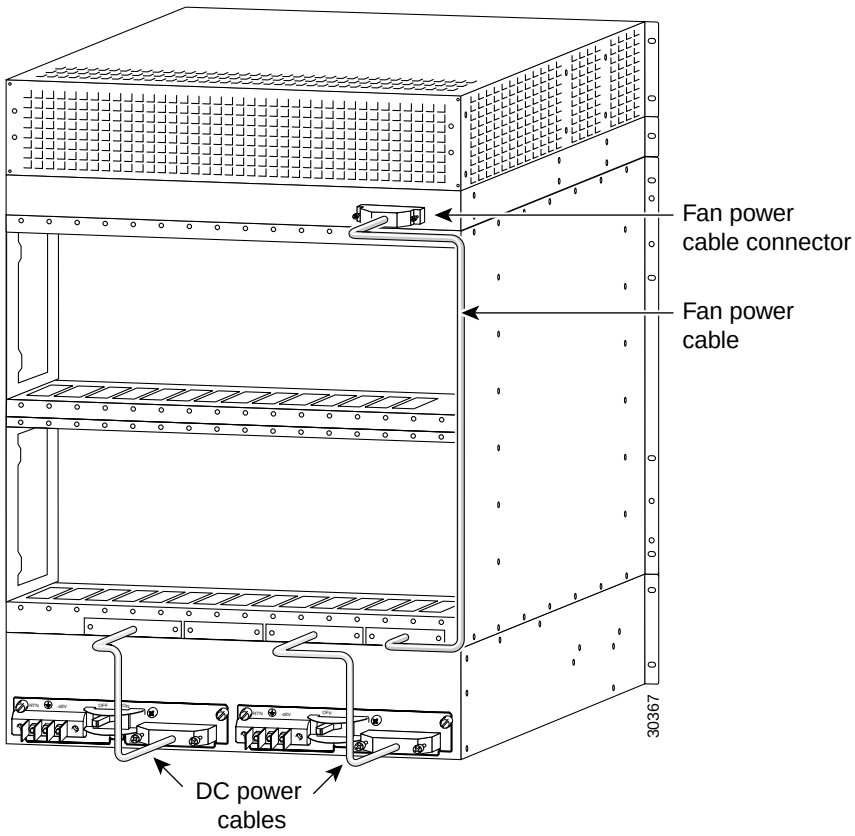

Connect the fan power cable as shown in following the instructions in the "Installing the Fan Power Cabling" section on page 4-11.

In the same manner, install the DC power cables to the motherboard and PEM following the instructions in the "Connecting DC Power to the Switch" section on page 4-19.

Installing the Cards

This section describes how to install front and back cards. Service modules can go in any slot except reserved slots 7, 8, 15, 16, 23, 24, 31, and 32. The PXMs and optional SRM *core cards* occupy these reserved slots. Additionally, upper slots 9 and 10 and lower slots 25 and 26 do not have a special bus for the bulk distribution feature. For this reason, Cisco recommends that if the switch contains one or more Route Processor Modules (RPM/Bs), the first 2 RPM/Bs go in slots 9 and 10.

Caution To prevent damage to the cards from static electricity, put on a wrist strap and connect it to any convenient metal contact on the switch before you touch any cards.

Caution Handle the PXM front card very carefully to preserve the alignment of the attached disk drive. Do not drop or bump the PXM.

Caution Inserting the cards in the correct slot is important for all cards but especially for the back cards because of the potential for electrical damage. If you insert a service module back card into a PXM back card slot (7, 8, 23, or 24), damage to the card and backplane may result.

If you accidentally insert a back card for a service module into slot 7, 8, 23, or 24 then observe incorrect switch operation, check for bent or damaged pins on the backplane and the back card.

Installing a Front Card

Verify the accuracy of the intended slot for each card before you begin installing the cards.

To install a front card:

Step 1 Position the rear card guides over the appropriate slot at the top and bottom of the cage.

Step 2 Gently slide the card all the way into the slot.

Step 3 Press the insertion-extractor lever until it snaps into the vertical position.

Note The card should slide in and out with only slight friction on the adjacent board's EMI gaskets. Do not use force, and investigate any binding.

Installing a Back Card

Verify the accuracy of the intended slot for each card before you begin installing the cards:

Caution Before using the switch, verify that the daughter card type on the PXM corresponds to the uplink card type. Serious damage may result if the power is on and these cards are mismatched.

To install a back card:

Step 1 Make sure the two extractor levers are in the "in" position. As you move the card, the levers should be flush with the vertical edge of the back card.

Step 2 Gently slide the card all the way into the slot.

Step 3 Push the card into the connector.

Step 4 Tighten the two captive screws on the card faceplate only enough to secure the card.

Redundancy for Service Modules

Service modules can have either 1:1 redundancy or 1:N redundancy. For information on installation requirements, refer to the section titled “Service Resource Module” in this chapter. For configuration steps, see the section for the SRM in Chapter 6, “Card and Service Configuration.” For instructions on how to use the CiscoView application to configure redundancy, refer to the CiscoView user-documentation.

1:1 Redundancy

For 1:1 redundancy, place the card sets in adjacent slots and connect the appropriate Y-cable to the paired ports on the active and standby cards. Applicable service modules are:

- MGX-FRSM-2CT3
- MGX-FRSM-2T3E3
- MGX-FRSM-HS2

Hot Standby

For hot standby, place the card sets in the same shelf and connect the appropriate Y-cable to the paired ports on the active and hot-standby cards. The hot-standby card will automatically configure itself to match the configuration of the primary card. This process may take up to eight minutes. After the configuration transfer process is completed, the transfer from the primary to the hot-standby card takes less that one second regardless of the number of connections. Any subsequent changes to the primary card are automatically transferred to the hot-standby card configuration so the two cards maintain the same configuration. Refer to the “Redundancy for Frame Service Modules” section on page 4-54 for instructions for setting up a redundant pair. Applicable service modules are:

- MGX-FRSM-2CT3
- MGX-FRSM-2T3E3
- MGX-FRSM-HS2

To determine the hot standby status of the system, use the command **dsphotstandby**.

1:N Redundancy

For 1:N redundancy, an MGX Service Resource Module-3T3 (MGX-SRM-3T3/B) card set is necessary. It supports 1:N redundancy for the following:

- MGX-AUSM-8T1/B
- MGX-AUSM-8E1/B

- MGX-FRSM-8T1
- MGX-FRSM-8E1
- AX-CESM-8T1
- AX-CESM-8E1

With 1:N redundancy, a group of service modules has one standby module. Redundancy by way of the *redundancy bus* on the MGX-SRM-3T3/B requires the redundant card group to have one of the following special back cards for redundancy support:

- R-RJ48-8T1-LM
- R-RJ48-8E1-LM

Processor Switching Module

This section describes the unique requirements for installing the Processor Switching Module (PXM) card set and briefly describes the features of each associated back card. The PXM card set consists of the PXM front card, the PXM User Interface back card (PXM-UI), and various *uplink* back cards that can serve as either a trunk or a UNI. Each description includes a faceplate description and a list of applicable cables. For instructions on how to configure the PXM functionality for switch and network control, see Chapter 5, "Configuring the MGX 8250 Switch." For lists of the physical details of PXM cards, standards compliances, and so on, see Appendix A, "System Specifications."

Note The common instructions for installing any card in this switch appear in an earlier section, "Installing the Cards."

Caution Handle the PXM front card very carefully to preserve the alignment of the attached disk drive. Do not drop or bump the PXM.

Caution Before using the switch, verify that the daughter card on the PXM corresponds to the uplink card type. Serious damage may result if the power is on and these cards are mismatched.

Note If you accidentally insert a back card for a service module into slot 7, 8, 23, or 24 then observe incorrect switch operation, check for bent or damaged pins on the backplane and the back card.

PXM Front Card

Primarily, the PXM1, shown in Figure 4-26, controls the switch and provides 1.2 Gbps of non-blocking, shared memory switching. In addition, the PXM features are:

- A disk drive that holds software, statistics, and firmware for all the cards (used for upgrades).
- Environmental monitoring (cabinet temperature, fan speed, and power supply voltages).

- Hot swappable, 1:1 redundancy.
- Automatic Protection Switching (APS). Note that APS is available for only the "B" models of the OC-3 and OC-12 uplink cards.

For descriptions of switch configuration tasks, see Chapter 5, "Configuring the MGX 8250 Switch." For descriptions of how to modify partitioning, specify APS, and add UNI-port connections, see Chapter 6, "Card and Service Configuration."

Figure 4-26 PXM Front Card

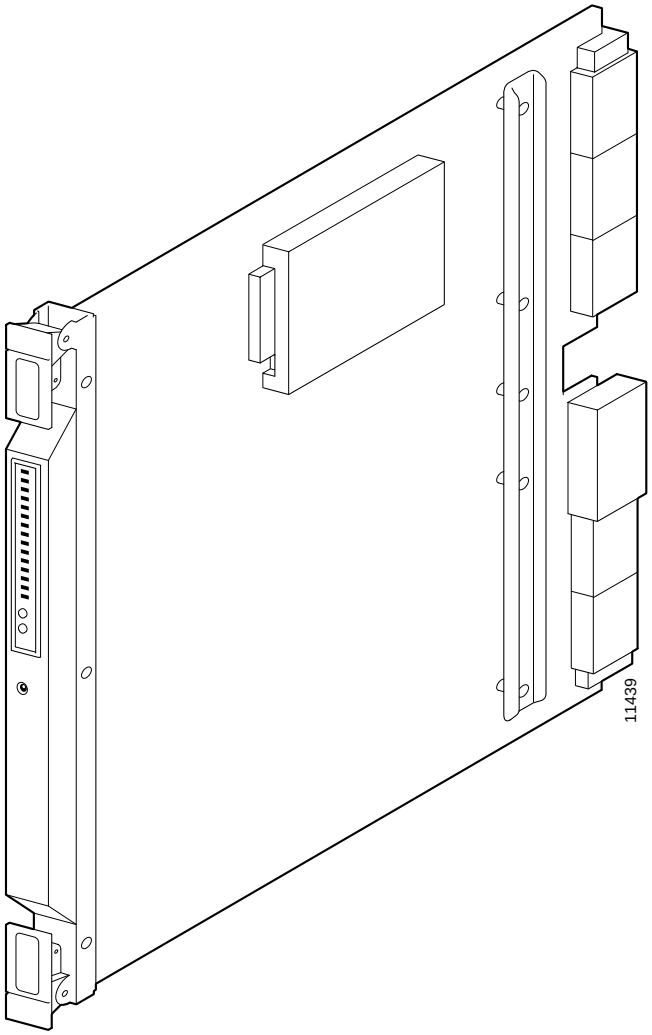

PXM User Interface Back Card

The PXM User Interface card (PXM-UI) connects the switch to the various ports which allow you to communicate with and control the switch. Install the PXM-UI in the upper half of the back of the PXM. See Figure 4-27 for the connectors on the PXM-UI. For specifications on this card, see Appendix A, "System Specifications."

The back card also provides:

- One DB-15 female connector for T1 or E1 clock input
- One BNC connector for E1 clock input
- One DB-15 female connector for alarm interface

Figure 4-27 User Interface Card for PXM

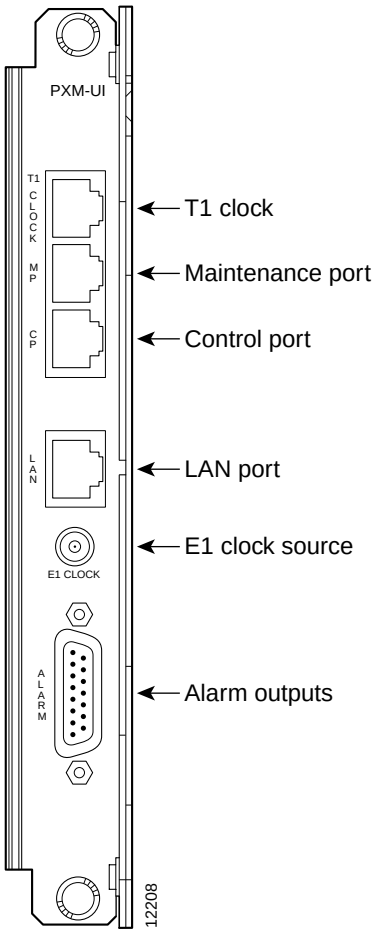

Making External Clock Connections

If external equipment or a local digital central office is to provide synchronization to the MGX 8250 switch, you can connect the external clock source to the PXM-UI back card. For a T1 clock input, connect the source to the RJ-45 connector labeled “T1 Clock.” For an E1 clock input, use the SMC connector marked “E1 Clock.” See Chapter 5, “Configuring the MGX 8250 Switch,” for this switch-level feature.

Alarm Output Connection

Dry contact relay closures are available for forwarding MGX 8250 alarms to an alarm system. Separate visual and audible alarm outputs are available for major and minor alarm outputs. The MGX 8250 alarm outputs are available on a DB-15 connector on the PXM-UI back card faceplate. Refer to Appendix B, "Cabling Summary," for the pinouts on this connector. Use switchboard cable for running these connections.

SMFLR-1-622 Back Card

An illustration of the long-reach OC-12 card appears in Figure 4-28. For specifications on this card, refer to Appendix A, "System Specifications." Note that Automatic Protection Switching (APS) requires the "B" model—an SMFLR-1-622/B.

Figure 4-28 OC-12 Long Reach Back Card

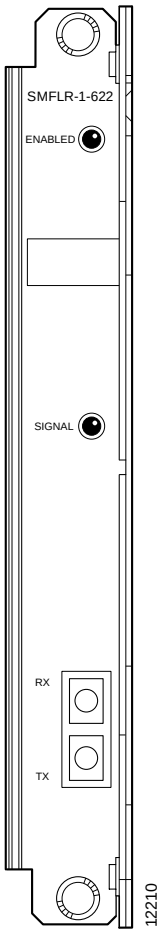

SMFIR-1-622 Back Card

The intermediate reach OC-12 back card appears in Figure 4-29. For specifications on this card, refer to Appendix A, "System Specifications." Note that Automatic Protection Switching (APS) requires the "B" model—an SMFIR-1-622/B.

Figure 4-29 Intermediate Reach OC-12 Back Card

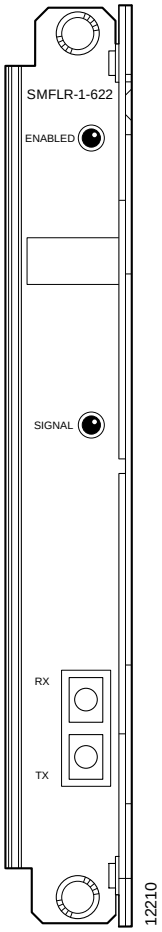

SMF-155 Back Card

The SMF-155 back card provides a physical single-mode fiber optic SONET OC-3 interface that conforms to ANSI T1.105 and GR-253-CORE standards. This interface uses SC connectors, and redundant configurations are supported through Y-cables. See Figure 4-30 for an illustration of the OC-3 back card. For specifications on this card, refer to Appendix A, “System Specifications.” Note that Automatic Protection Switching (APS) requires the “B” model—an SMF-155/B.

Figure 4-30 Four-Port OC-3 Back Card

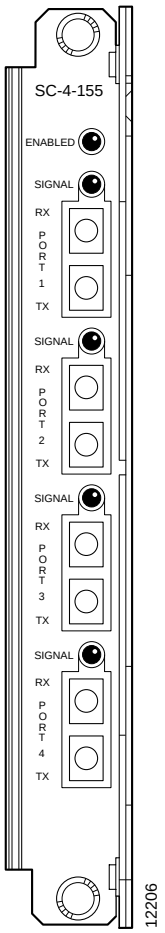

BNC-2T3 Back Card

An illustration of the two-port T3 back card appears in Figure 4-31. For card specifications, refer to Appendix A, “System Specifications.”

Figure 4-31 BNC-2T3

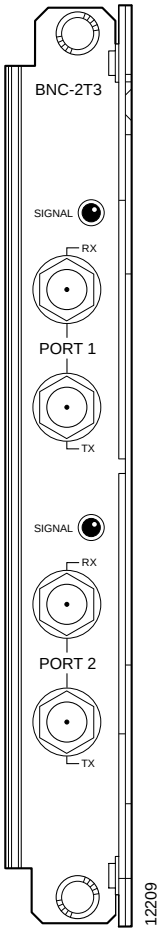

BNC-2E3 Back Card

Two versions of the BNC-2E3 card are available. The BNC-2E3A applies to Australia only, and the BNC-2E3 applies to all other sites that require E3 lines on the PXM uplink card. An illustration of the two-port E3 back card appears in Figure 4-32. For specifications on this card, refer to Appendix A, "System Specifications."

Figure 4-32 BNC-2E3

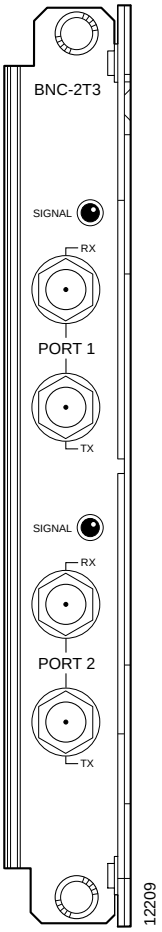

ATM UNI Service Module

The MGX-AUSM-8T1/B and MGX-AUSM-8E1/B (or simply "AUSM/B" as a generic reference to both card sets) are multipurpose front cards that use an 8-port T1 or E1 back card. The AUSM/B supports the following applications:

1. ATM Inverse Multiplexing N x T1 and N x E1 trunking

   This application supports inverse multiplexed trunks between BPX 8600-series network switches through MGX 8250 switches and remote MGX 8250 switches.

2. ATM UNI card with eight ports to provide a high-port-density service module

With all 24 available slots installed with the AUSM/B cards, a single MGX 8250 switch can support up to 192 individual T1 or E1 lines.

In UNI/NNI mode each card can support 1000 data connections and 16 management connections.

3. UNI/NNI access to CPE and other networks

   This application allows access over an UNI to IMA-based CPE and over an NNI to another ATM network.

4. NNI/NNI access to CPEs

   This application supports ATM ports over single T1 or E1 line and IMA ports over multiple lines (connected to IMA-based CPE).

The following back cards are compatible with the AUSM/B:

- RJ48-8T1 back card for T1
- RJ48-8E1 back card for E1
- SMB-8E1 back card for E1

The AUSM/B has the following features:

- Statistics collection.
- Support for VP connections.
- Support for BERT functionality with loopback pattern generation/verification on individual lines.
- Auto-card restore.
- 1:N redundancy for all back card types through the optional Service Resource Module (SRM).

AUSM Front Card

The AUSM/B front card oversees all major functions of the ATM interface. It contains firmware for both the T1 and the E1 line interfaces and downloads from the PXM the appropriate code when it recognizes the back card type. An illustration of an eight-port AUSM/B front card appears in Figure 4-33. For specifications on this card, refer to Appendix A, “System Specifications.”

Figure 4-33 AUSM/B-8T1 or AUSM/B-8E1 Front Card

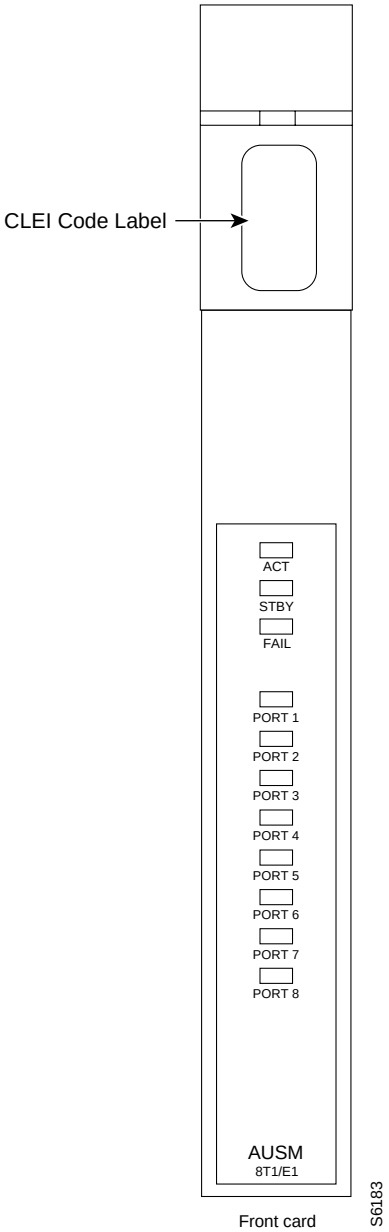

Descriptions of the LED indicators on the faceplate of the AUSM/B appear in Table 4-1.

Table 4-1 Eight-Port AUSM/B LED Indicators

Type of LED	Color	Description
PORT LED	Green	Green indicates the port is active.
	Red	Red indicates a local alarm on the port.
	Yellow	Yellow indicates a remote alarm on the port.
		Off indicates the port has not been activated (upped).

Table 4-1 Eight-Port AUSM/B LED Indicators (continued)

Type of LED	Color	Description
ACTIVE LED	Green	On indicates the card set is in active mode.
STANDBY LED	Yellow	Slow blink with Active LED off means the card is in the boot state.
		Fast blink with Standby LED on means card is receiving firmware.
		Fast blink indicates the service module is passing BRAM channel information to the PXM.
		Steady yellow indicates the card is in Standby mode and the firmware is executing ADMIN code.
FAIL LED	Red	Steady Red with Active and Standby LEDs off indicates either the card is in the Reset condition, the card has failed, or the card set is not complete (no line module).
		Steady Red with Active LED on indicates the card was active prior to failing.
		Steady Red with Standby LED on indicates the card was standby prior to failing.

Back Cards for the AUSM/B

The MGX-AUSM-8T1/B and MGX-AUSM-8E1/B use the generic 8-port T1 or E1 line modules that operate with the 8-port service modules. The standard T1 version of the back card has eight RJ-48 connectors. The standard versions of the E1 back card have either eight RJ-48 connectors or eight pairs of SMB connectors. To support 1:N redundancy through an MGX-SRM-3T3/B card set, special versions of the RJ-45 back card must exist in the system

Redundancy Support for the AUSM

Redundancy support for the AUSM requires an MGX-SRM-3T3/B card set and the special versions of the RJ-45 back cards that support redundancy. See Figure 4-34 and Figure 4-35 for illustrations of the back cards. Differences exist in certain aspects of redundancy support for the MGX-AUSM-8T1/B and MGX-AUSM-8E1/B. For details on the requirements for redundancy through an MGX-SRM-3T3/B, refer to the section in this chapter titled “Service Resource Module.”

Figure 4-34 Standard RJ-48 Back Card for the MGX-AUSM-8T1/B

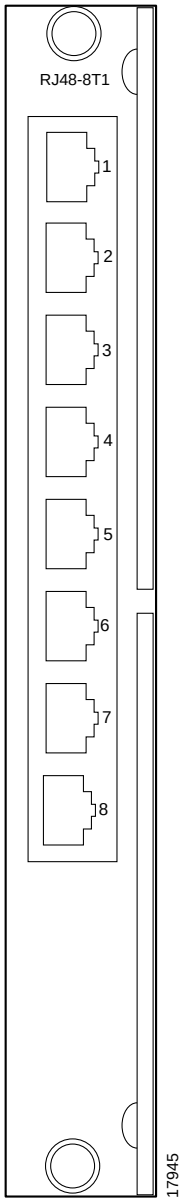

T1 RJ48
Back Card

Figure 4-35 Standard RJ-48 and SMB Back Cards for the MGX-AUSM-8E1/B

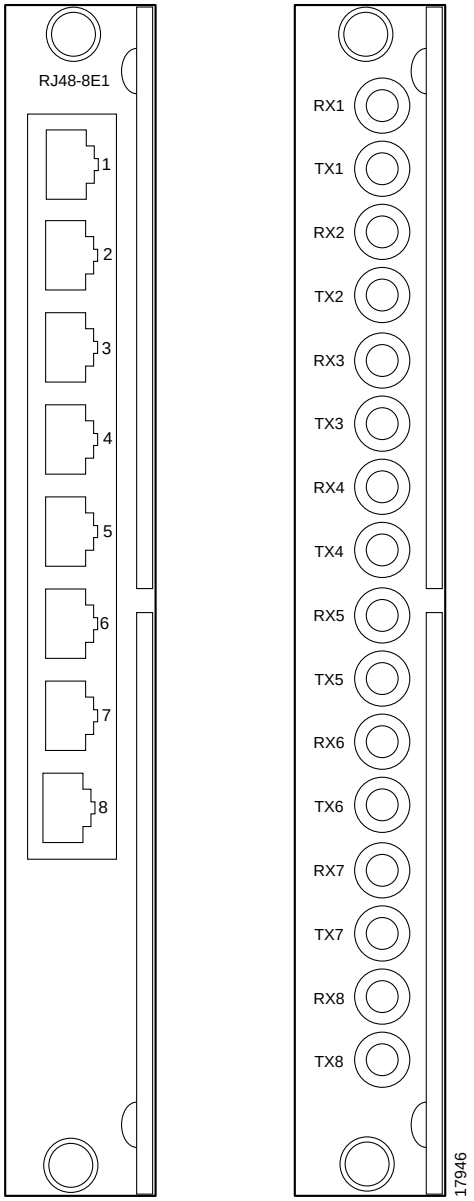

Frame Service Modules

This section describes installation requirements that are particular to the various types of Frame Service Modules (FRSMs). For hardware and other specifications on the FRSMs, refer to Appendix A, "System Specifications." For descriptions of how to configure the card, lines, and ports and add Frame Relay connections, refer to Chapter 6, "Card and Service Configuration." The supported FRSM front cards and related back cards are:

- MGX-FRSM-2CT3 front card with the BNC-2T3 back card
- MGX-FRSM-2T3E3 front card with a BNC-2T3 or BNC-2E3 back card
- MGX-FRSM-HS2 with a SCSI2-2HSSI back card
- MGX-FRSM-HS1/B with an MGX-12IN1-S4 back card
- AX-FRSM-8T1 or AX-FRSM-8E1 with one of the following back cards:
  - RJ48-8T1-LM
  - R-RJ48-8T1-LM (for redundancy support only)
  - RJ48-8E1-LM
  - SMB-8E1-LM
  - R-SMB-8E1-LM (for redundancy support only)

An FRSM can reside in any slot except 7, 8, 15, 16, 31, and 32. In addition, any card for which you specify 1:N redundancy through the redundancy bus and the MGX-SRM-3T3/B cannot go in slot 9, 10, 25, or 26. Whenever possible, the VHS cards should go in the upper bay of the card cage because the upper half of the backplane provides higher bandwidth at each slot.

Very High Speed Frame Service Modules

FRSM-VHS supports Frame Relay services on a T3, E3, or HSSI interface. (The collective name for the MGX-FRSM-2CT3, MGX-FRSM-2T3E3, and MGX-FRSM-HS2 is Very High Speed Frame Service Modules—FRSM-VHS for short). The distinction between the front cards is the firmware operation. The FRSM-VHS group consists of:

- MGX-FRSM-2CT3, which provides channelized Frame Relay service over two T3 lines on a BNC-2T3 back card.
- MGX-FRSM-2T3E3, which provides unchannelized (clear-channel) Frame Relay service over two T3 lines at 44.736 Mbps each. It can also support subrate T3 for tiered DS3 on each physical port. The back card is a BNC-2T3.
- MGX-FRSM-2E3, which provides unchannelized (clear-channel) Frame Relay service over two E3 lines at 34.368 Mbps each. It can also support subrate E3 for tiered DS3 on each physical port. The back card is a BNC-2E3A in Australia or a BNC-2E3 everywhere else that requires E3.
- MGX-FRSM-HS2, which provides unchannelized Frame Relay service over two HSSI lines on the SCSI2-2HSSI back card. Each port can operate in either DTE or DCE mode.

Example illustrations of the FRSM-VHS front and back cards appear in the figures that follow.

- For the MGX-FRSM-2CT3 front card, see Figure 4-36.
- For the MGX-FRSM-2T3E3 front card, see Figure 4-37.
- For the MGX-FRSM-HS2 front card, see Figure 4-38.
- For the BNC-2T3 back card, see Figure 4-39.
- For the BNC-2E3 back card, see Figure 4-40.
- For the SCSI2-2HSSI back card, see Figure 4-41.

Figure 4-36 MGX-FRSM-2CT3

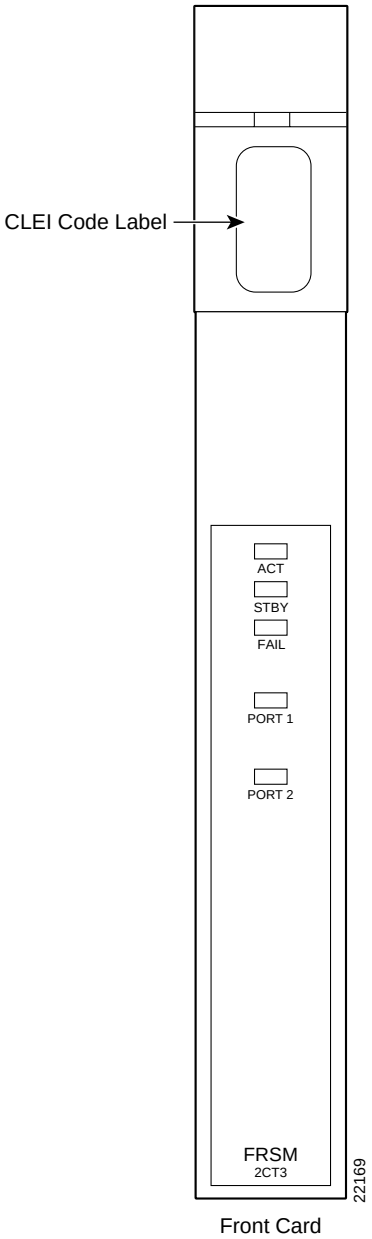

Front Card

Figure 4-37 MGX-FRSM-2T3E3

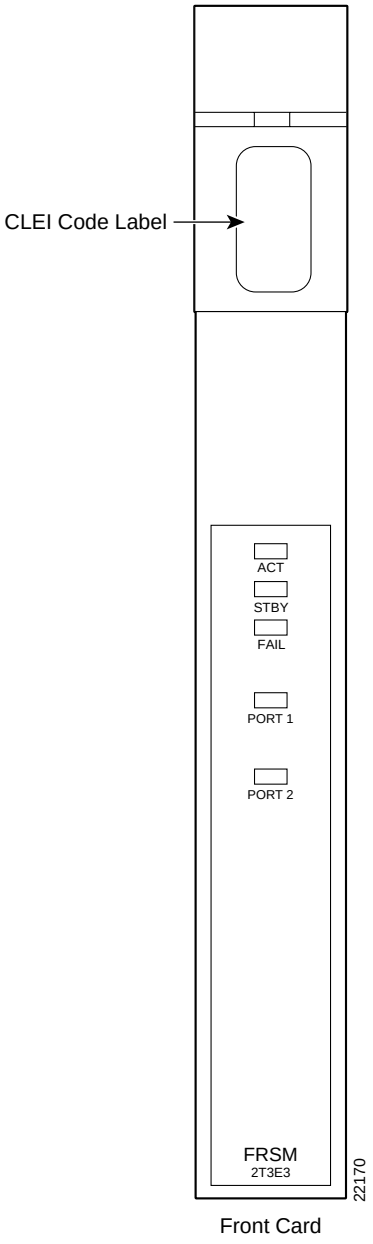

Front Card

Figure 4-38 MGX-FRSM-HS2

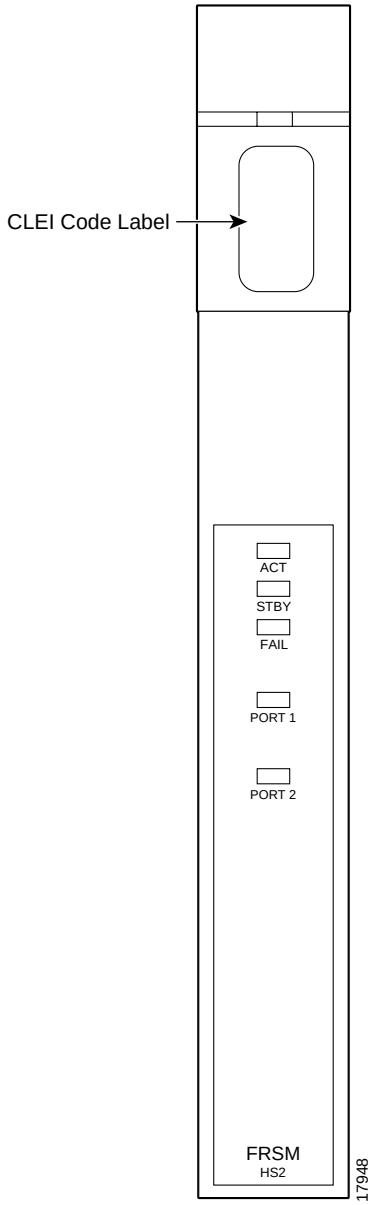

Front Card

Figure 4-39 BNC-2T3

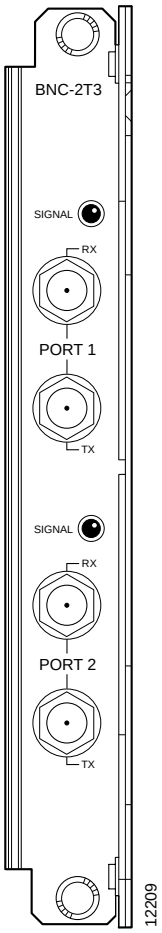

Figure 4-40 BNC-2E3

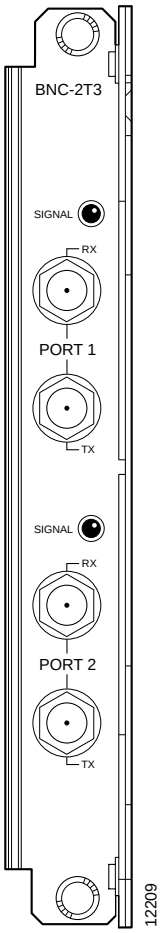

Figure 4-41 SCSI2-2HSSI

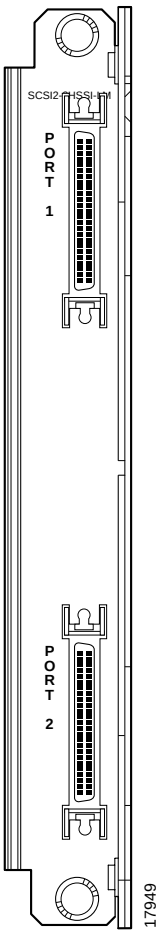

Four-Port FRSM for V.35 or X.21

The MGX-FRSM-HS1/B supports four V.35 or four X.21 ports. Each port can operate in DTE or DCE mode. The mode depends on the type of attached cable. The information in this section lets you determine the correct cabling for the intended mode of each port. For a description of card, line, and port configuration, see Chapter 6, “Card and Service Configuration.” An illustration of the MGX-FRSM-HS1/B front card appears in Figure 4-42. The multifunction 12IN1-S4 back card appears in Figure 4-43. Cabling descriptions follow Figure 4-42.

Note The MGX-FRSM-HS1/B does not support redundancy, so redundancy is not a consideration for deciding on a slot for the card. Nevertheless, it should be in the lower bay due to cell bus speed.

Figure 4-42 MGX-FRSM-HS1/B Front Card Faceplate

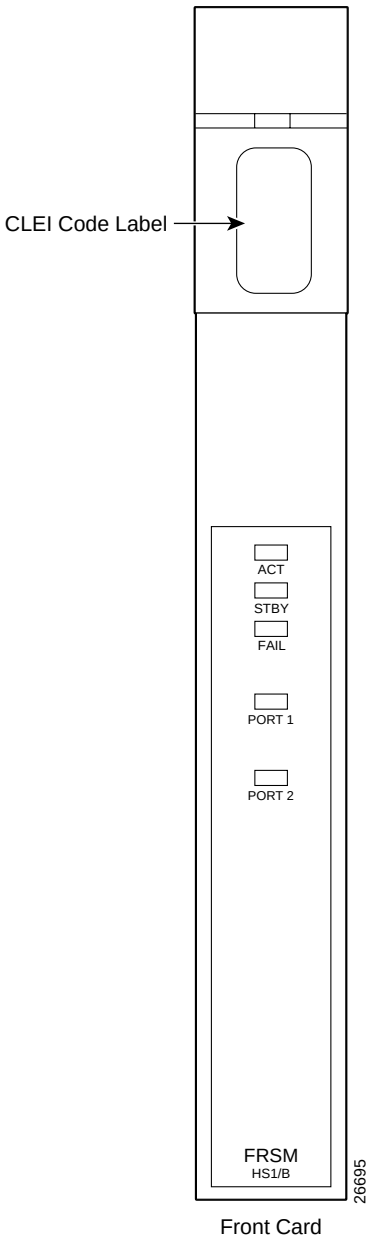

The cable models come from the Cisco 12IN1 series of cables. (See Table 4-2.) Each cable can have a male or female connector at the far end. Also, the available clock sources depend on the mode. In DTE mode, the clock source is either *line* or *ST* (ST is a wire in the cable). For DCE, the clock source is the front card. See Table 4-3 for the relationship between cabling and modes and Table 4-4 for part numbers.

Table 4-2 12IN1-S4 Back Card Cable Types

Cable Type	X.21	V.35
DCE	X.21 DCE	V.35 DCE
DTE	X.21 DTE	V.35 DTE

Table 4-3 Cabling and Clock Sources for the MGX-FRSM-HS1/B

Mode	Type of Cable	Clock Source	Mode of Far End
DTE	DTE	line	DCE (male or female connector at far end)
DCE	DCE	internal	DTE (male or female connector at far end)
DTE_ST	DTE	ST line	DCE (male or female connector at far end)

Table 4-4 Cabling Types and Part Numbers X.21 and V.35

Type of Cable	Far End Connector	Part Number
X.21 DTE	male (standard)	72-1440-01
X.21 DCE	female (standard)	72-1427-01
V.35 DTE	male (standard)	72-1428-01
V.35 DTE	female (atypical)	72-1436-01
V.35 DCE	female (standard)	72-1429-01
V.35 DCE	male (atypical)	72-1437-01
V.35 DTE-DCE		72-1441-01
Straight-through		72-1478-01
Loopback plug		72-1479-01

Note The cable type and part number are printed on a plastic band located near the smaller connector.

Figure 4-43 12IN1 S4 Back Card Faceplate

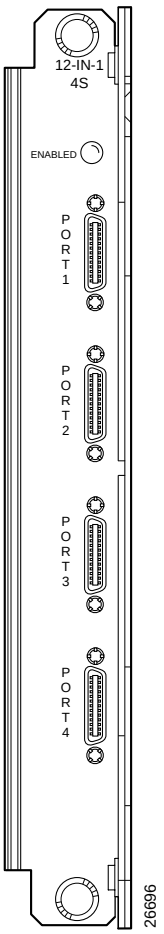

Eight-Port FRSM With T1 or E1

The eight-port FRSMs support channelized or unchannelized service on either T1 or E1 lines.

Figure 4-44 (applies to both MGX-FRSM-8T1 and MGX-FRSM-8E1), and Figure 4-45 and Figure 4-46 (primary and redundant back cards for T1 and E1) show these cards.

Figure 4-44 MGX-FRSM-8T1

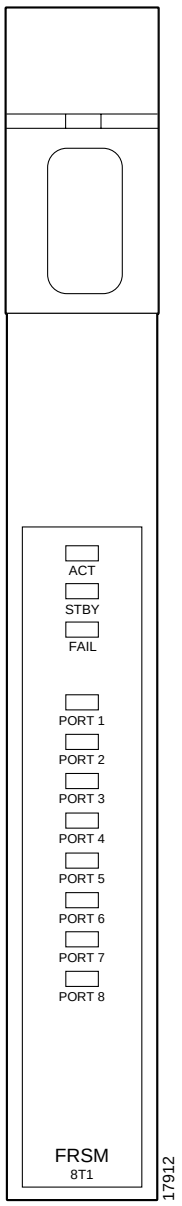

Figure 4-45 Standard RJ-48 Back Card for the MGX-FRSM-8T1

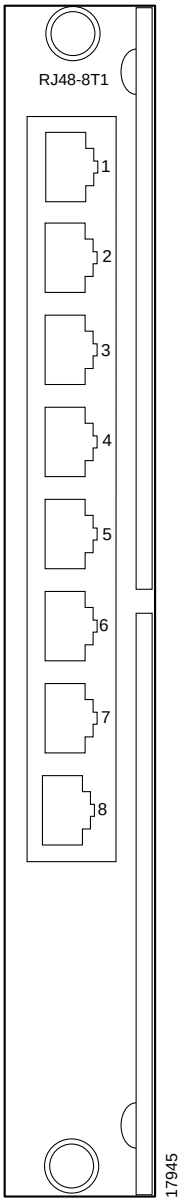

T1 RJ48
Back Card

Figure 4-46 Standard RJ-48 and SMB Back Cards for the MGX-FRSM-8E

1

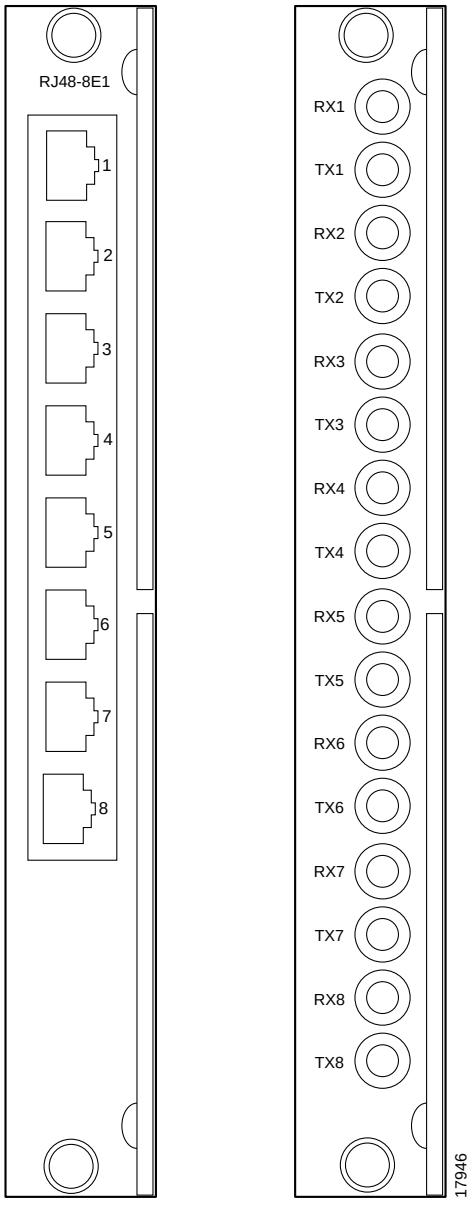

Redundancy for Frame Service Modules

FRSMs can have either hot standby, 1:1 redundancy or 1:N redundancy. For 1:1 redundancy, a Y-cable is necessary. The very high speed MGX-FRSM-2CT3, MGX-FRSM-2T3E3, and MGX-FRSM-HS2 use Y-cable redundancy. For 1:N redundancy, an MGX-SRM-3T3/B (but no Y-cabling) are required. Differences may exist in the way the MGX-SRM-3T3/B supports redundancy for a particular T1 or E1 configuration. Refer to the section titled “Service Resource Module” in this chapter and the Service Resource Module description in Chapter 6, “Card and Service Configuration.”

Hot Standby

For hot standby, place the card sets in slots on the same card shelf and connect using an appropriate Y-cable to connect each hot standby pair. To view the hot standby status of the system, use the **dsphotstandby** command.

1:1 Redundancy

For 1:1 redundancy, place the card sets in adjacent slots and connect a Y-cable for each pair of active and standby ports. On the CLI, configure the card for redundancy by executing the **addred** command. For instructions on how to use the CiscoView application to configure redundancy, refer to the CiscoView user-documentation.

1:N Redundancy

A 1:N redundancy for the 8-port FRSMs requires an MGX-SRM-3T3/B. With 1:N redundancy, a group of service modules includes one standby module. For installation requirements, see the "Service Resource Module" section in this chapter. For configuration requirements, see the section on the MGX-SRM-3T3/B in Chapter 6, "Card and Service Configuration."

Circuit Emulation Service Module

The main function of the Circuit Emulation Service Module (CESM) is to provide a constant bit rate (CBR) circuit emulation service by converting data streams into CBR AAL1 cells for transport across an ATM network. The CESM supports the CES-IS specifications of the ATM Forum.

The 8t-port models AX-CESM-8T1 and AX-CESM-8E1 let you configure individual physical ports for structured or unstructured data transfer. A card set has an AX-CESM-8T1 or AX-CESM-8E1 front card and one of the following back cards:

- RJ48-8T1-LM
- R-RJ48-8T1-LM (for redundancy support only)
- RJ48-8E1-LM
- SMB-8E1-LM
- R-SMB-8E1-LM (for redundancy support only)

Redundancy for the 8-Port CESM

Redundancy for the AX-CESM-8T1 and AX-CESM-8E1 is available through the MGX-SRM-3T3/B. The support is 1:N and so requires that the group contain one redundancy back card. The redundancy back card must be the special R-RJ45 version. For information on installation requirements, refer to the "Service Resource ModuleG" section. For configuration requirements, see the section on the SRM in Chapter 6, "Card and Service Configuration." For instructions on how to use the CiscoView application to configure redundancy, refer to the CiscoView user-documentation.

Figure 4-47 Front Cards for the 8-Port CESM

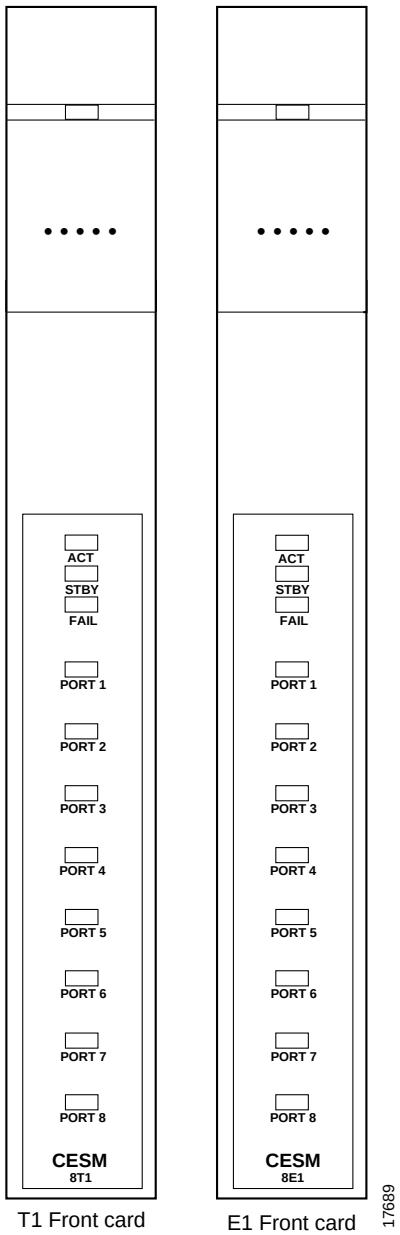

LED Indicators for the 8-Port CESM

The description of the LEDs on the 8-port CESM front card appear in Table 4-5.

Table 4-5 LED Indicators for 8-Port CESM

Type of LED	Color	Meaning
PORT LED	Green	Green indicates the port is active.
	Red	Red indicates a local alarm on the port.
		Off indicates the port has not been activated (upped).
ACTIVE LED	Green	On indicates the card set is in active mode.
STANDBY LED	Yellow	Slow blink without the Active LED indicates the card is in the boot state.
		Fast blink with the Standby LED indicates the card is being downloaded.
		Fast blink indicates the service module is passing BRAM channel information to the PXM1
		Steady yellow indicates the card is in Standby mode and the firmware is executing ADMIN code.
FAIL LED	Red	Steady Red with Active and Standby LEDs off indicates either the card is in the Reset condition, the card has failed, or the card set is not complete (no line module).
		Steady Red with Active LED on indicates the card was active prior to failing.
		Steady Red with Standby LED on indicates the card was standby prior to failing.
		Both standby and red LED lit indicates self test failure.

Figure 4-48 Standard RJ48-8T1 Back Card

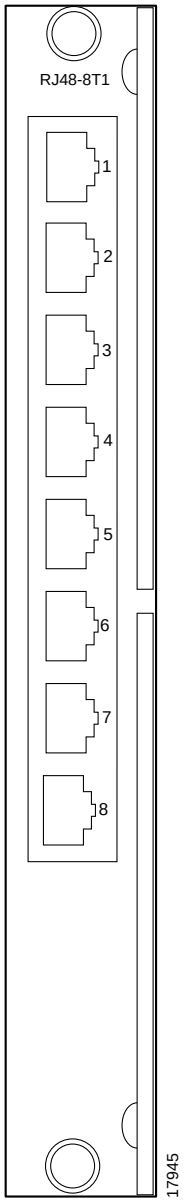

T1 RJ48
Back Card

Figure 4-49 Standard RJ48-8E1 and SMB-8E1 Back Cards

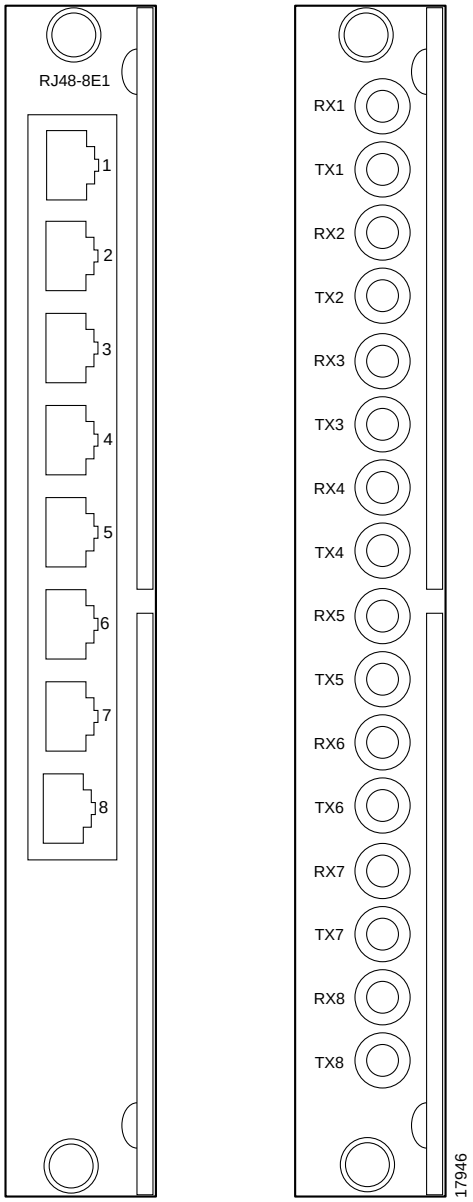

Service Resource Module

This section describes the possible impact of installing a Service Resource Module-3T3 (MGX-SRM-3T3/B) on the service modules it supports. The MGX-SRM-3T3/B (or "SRM" for short) can provide 1:N redundancy for the T1 and E1 cards as well as bulk distribution for T1 cards. It has no communication with higher-speed service modules, such as the MGX-FRSM-2CT3 and MGX-FRSM-HS2. See Figure 4-50 for an illustration of the MGX-SRM-3T3/B front card and the MGX-BNC-3T3-M back card.

The multifunction SRM has the following capabilities:

- A demultiplexing function called *bulk distribution* carries traffic across the *distribution bus* between the T3 lines on the MGX-SRM-3T3/B and the T1 service modules. Bulk distribution can greatly reduce the number of T1 lines coming into the enclosure.
- 1:N redundancy support for service modules with RJ-48 connectors.
- Bit error rate testing (BERT) for T1 and subrate service module lines.

General Installation Requirements for the MGX-SRM-3T3/B

The following are card-level characteristics that apply to any SRM installation:

- The MGX-SRM-3T3/B and supported service modules must be in the same (top or bottom) bay.
- A non-redundant setup requires an MGX-SRM-3T3/B in slot 15 for the upper bay or slot 31 for redundancy in the lower bay. The PXM1 in slot 7 controls the SRMs in slots 15 and 31.
- An optional, redundant PXM1 in slot 8 controls the redundant SRMs in slots 16 and 32.
- If the switch has one or two primary SRMs for the primary PXM1 and the switch also has a redundant PXM1, it must have a redundant SRMs. Therefore, the switch can use one, two, or four MGX-SRM-3T3/Bs.
- The distribution bus does not support slots 9, 10, 25, and 26, so any service module that uses bulk distribution or relies on the distribution bus for redundancy cannot reside in these slots.

Bulk Distribution and Redundancy Support

The use of bulk distribution affects the requirements for SRM and service module back cards:

- With bulk distribution and 1:N redundancy support by way of the distribution bus, the service modules do not use back cards.
- For just 1:N redundancy by way of the redundancy bus, the supported service modules must have back cards—including one special redundancy back card. E1 redundancy requires the R-RJ48-8E1 line module, and T1 redundancy requires the R-RJ48-8T1 line module.

For bulk distribution, the T3 lines connect to an external multiplexer. The T1 lines on the other side of the multiplexer connect to the CPE. The SRM converts the received traffic from its T3 lines to T1 channels and sends the data to *linked* service modules. For instructions on linking T1 channels and card slots to the MGX-SRM-3T3/B, see Chapter 6, “Card and Service Configuration.”

For bulk distribution of T1 lines, note the following about the MGX-SRM-3T3/B:

- Each T3 line can support up to 28 T1 channels.
- The maximum number of T1 channels an MGX-SRM-3T3/B can support at one time is 80.

Note Upon replacing the failed card, you must switch back to normal operation because the switch does not automatically do so.

Figure 4-50 MGX-SRM-3T3/B Card Set

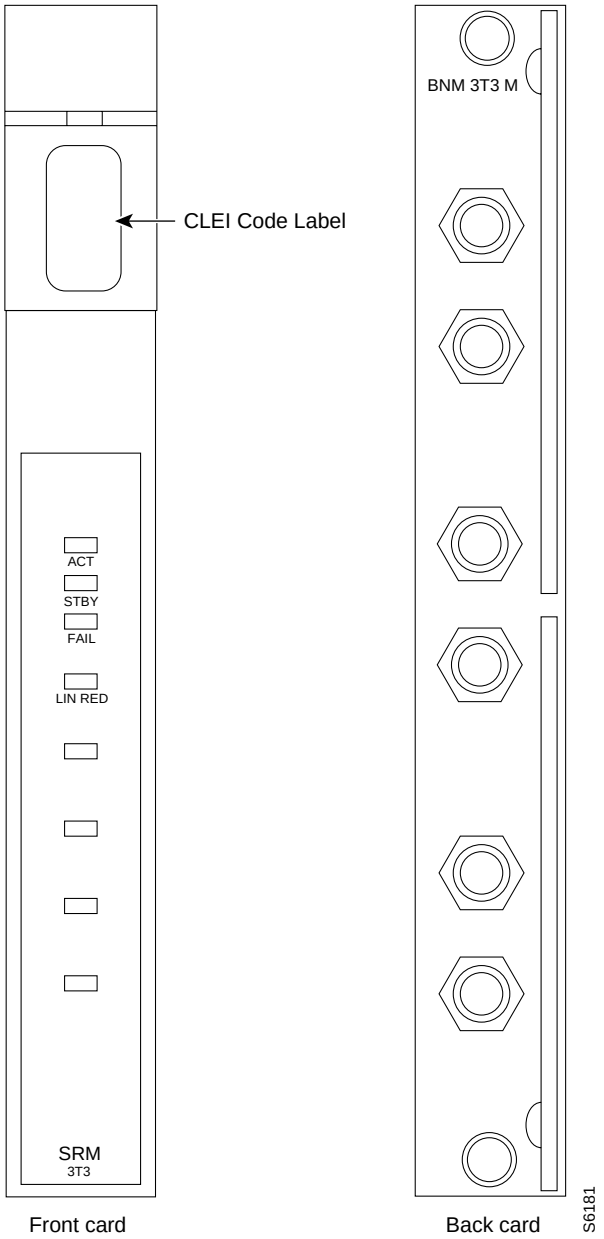

Routing Data Cables

Copper-based data cables from the back cards run up or down to the cable manager and pass through the channels then run to either the left or right side of the rack. Fiber optic cables pass over the sheet metal portion. The cables subsequently go to the related equipment (CPE, for example). The view in Figure 4-51 shows only the cable manager on top.

Figure 4-51 Routing Data Cables at the Cooling Assembly

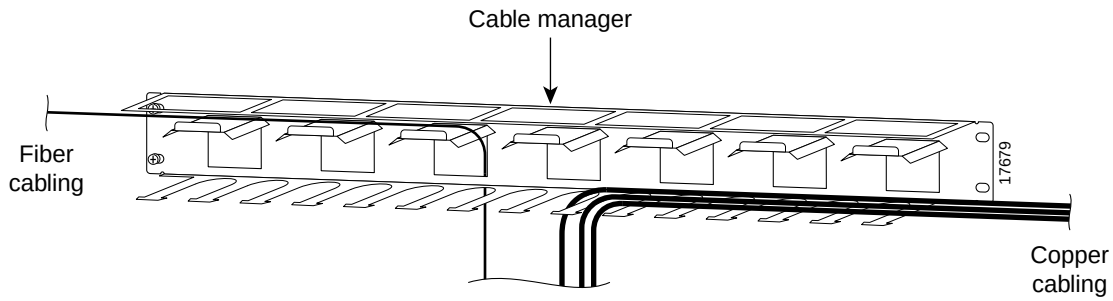

Initial Start-up of the MGX 8250 Switch

Before applying power to the MGX 8250 switch, check the following items:

1. Switch has proper grounding.
2. AC or DC power sources are correctly installed.
3. All cards are locked in the correct slots.
4. All cables are secure.
5. Control terminal is connected.

After the preceding checks, turn on the power. Check the following:

1. At the front of the unit, the status light on the PXM1 should be green.
2. For an AC-powered system, the “AC” and “DC” LEDs on each power supply should be green.
3. For a DC-powered system, the “DC OK” LED should be on.
4. After each service module comes up, the status LED should show that the card is in standby.
5. When power is turned on, make a visual check to verify that all fans are running.
6. After the system comes up, execute the **dsppwr** command.

Note Neither the AC power supplies nor any other components have test points for checking power supply voltages. For a visual check, observe whether the AC OK LED and DC OK LED are lit.

Note If you remove and reseat a back card or change it for another card, reset the related front card.

Converting Single-Height Slots to Double-Height Slots

The wiring on the Cisco MGX 8250 backplane requires you to consider the conversion sequence and other details when you convert single-height slots to double-height slots. One slot conversion means that you convert four single-height slots to two double-height slots. Be aware of the following before you convert the slots:

- Slot conversions begin on the left (as you face the front of the switch) and progress to the right. The starting point can be either slots 1–2 or slots 9–10. The exceptions are reserved slots 15–16 for the SRMs. You can convert SRM slots out of sequence.
- Slot conversions take place in the following pairs: 1–2, 3–4, 5–6, 9–10, 11–12, and 13–14.
- For conversions that involve either the left wall of the card cage or a bulkhead to the left of the slot, you must unscrew a track from the wall.
- After conversion, the new double-height slots take the number of the upper slot. For example, after you convert slots 1 and 2, slot numbers 17 and 18 become meaningless.
- Slots 7, 8, 15, 16, 31, and 32 are the reserved slots. The PXM1 cards (in a redundant configuration) reserve 7 and 8. If your system has one or more SRMs, the primary pair must reside in slots 15 and 31. The redundant pair resides in 16 and 32.

With a factory-installed Cisco MGX 8250 switch, the single- and double-height cards reside in the preassigned locations. Refer to Figure 4-52 for an illustration of an enclosure that shows installed cards and center guide modules. Certain slots have a small, L-shaped bracket holding in the card. All instances of this bracket are the card slots immediately to the right of an enclosure wall (or bulkhead). The system has three such brackets.

Figure 4-52 Front View of an AC-Powered Cisco MGX 8250 Switch

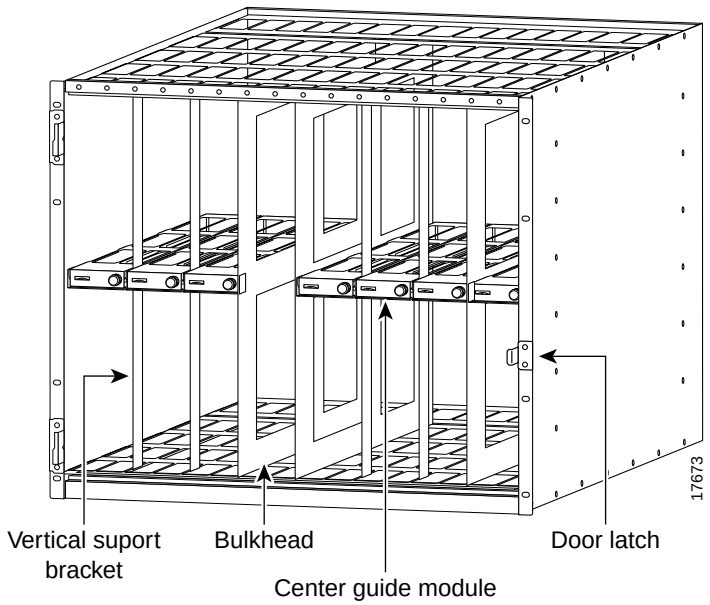

Each center guide module is secured by either a *vertical support bracket* or a simpler *support bracket*. Most center guide modules rely on the vertical support bracket. Three locations use the small support bracket: at the left wall of the card cage and at the bulkhead to the right of slot 8 or slot 14. For an illustration of a center guide module with support bracket, see Figure 4-54. For an illustration of a center guide module with *vertical* support bracket, see Figure 4-53.

Warning **Use extreme caution when executing the following steps with system power turned on.**

To convert four single-height slots to two double-height slots in an operational system:

Step 1 Remove the cabling from the back card unless the back card applies to the double-height configuration after the conversion.

Step 2 Remove the back card.

Step 3 Remove the front card.

Step 4 Repeat steps 2 and 3 for every other single-height module you remove.

Step 5 Rotate the screw that holds in the vertical center guide module.

Where either the left wall of the card cage or a bulkhead exists on the left of the single-height card slots, a simple, L-shaped bracket holds in the center guide module.

Step 6 If the center guide module has either type of wall to the left, unscrew the track attached to the wall. If necessary, remove cards to unscrew it.

Step 7 Remove the vertical support bracket by moving it up and down until you can take it out. A hole becomes visible in the center guide module for inserting a screw driver.

Step 8 Insert a screw driver and loosen the long screw that holds in the center guide module.

Step 9 Remove the center guide module.

Step 10 Install the double-height front card and back cards as needed.

A simpler situation exists when you install a new MGX 8250 switch in a non-Cisco rack or an existing Cisco cabinet: just unscrew the center guide module and remove it. If the enclosure has the optional front door, blank faceplates are not necessary. With no door, you must install a blank faceplate if you create two double-height slots but install only one card.

Figure 4-53 Center Guide Module with Support Bracket

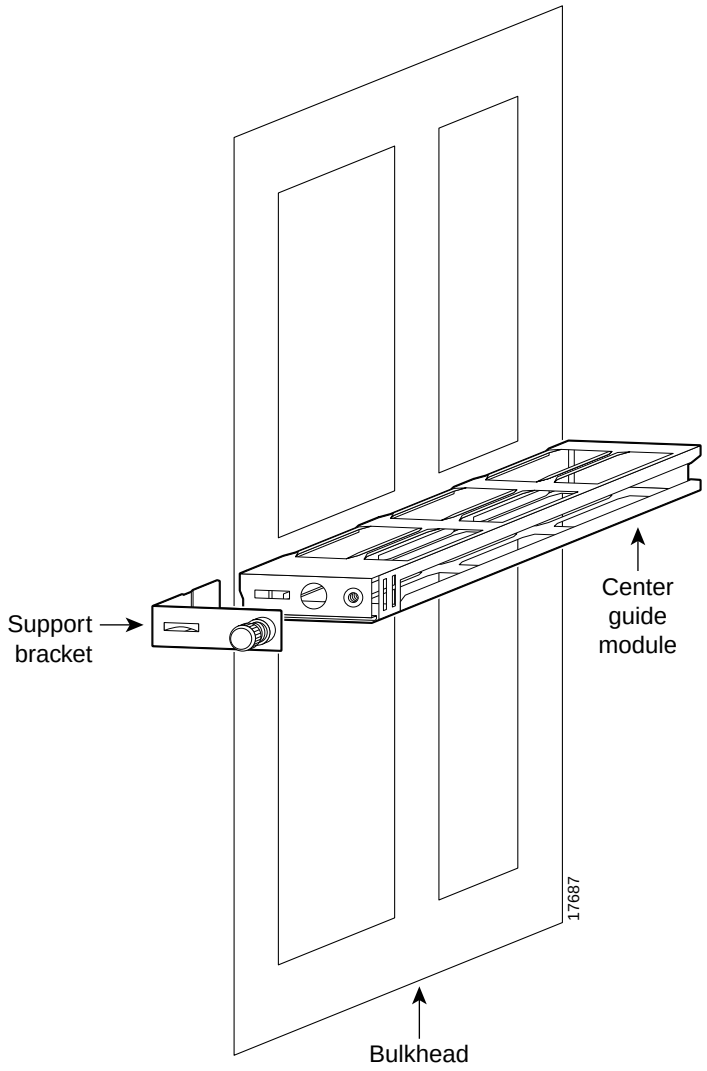

Figure 4-54 Center Guide Module with Vertical Support Bracket

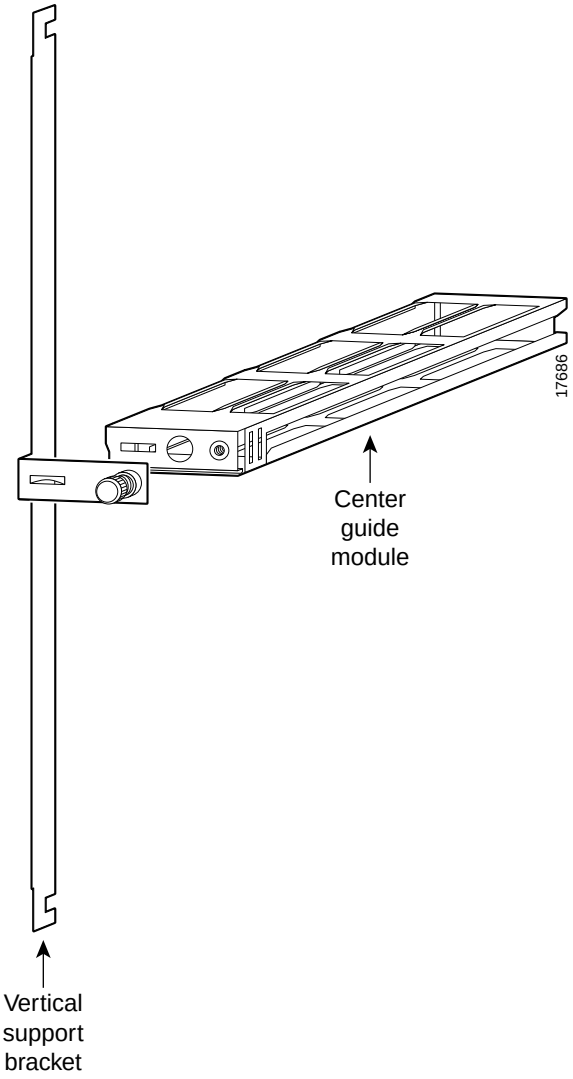

CHAPTER 5

Configuring the MGX 8250 Switch

This chapter describes switch-level tasks for bringing up and configuring an MGX 8250 switch. The tasks begin at the point where all hardware is in place and the power is on and alarm-free. These initial tasks require you to use the command line interface (CLI) on an ASCII terminal. You can use either the CiscoView application or the CLI to continue with switch configuration.

- "Bringing Up an MGX 8250 Switch" introduces initial bring-up of the MGX 8250 switch.
- "Switch Access Ports" describes the role of each switch control port.
- "Initial Switch Bring-Up" is a list that identifies the tasks for configuring the switch.
- "Bringing Up a PXM with No Runtime Firmware" describes how to load runtime firmware.
- "Configuring Switch-Level Parameters" describes how to configure switch-level parameters.
- "Downloading Firmware to a Service Module" describes service module firmware loading.

Bringing Up an MGX 8250 Switch

This section describes the initial configuration steps for a new switch from Cisco. The tasks in this section apply to the switch whether the use is a feeder or stand-alone switch. The topics are:

- How the access ports for controlling the switch relate to configuration.
- Initial bring-up of a Processor Switching Module (PXM) that has no runtime (or "on-line") firmware image.
- Configuration tasks for the PXM with runtime firmware.

Note The word "bay" is the upper or lower half of the enclosure.

Note To add an MGX 8250 switch to the network, you execute **addshelf** at the BPX 8600 series switch. See Appendix C, "Commands That Apply to the MGX 8250 Switch," for a description of this and related commands.

Switch Access Ports

Three external ports exist for controlling the switch through the Processor Switching Module User Interface card (PXM-UI):

1. Through the *control port* (sometimes called the console port), you can use the command line interface (CLI) on an ASCII terminal. The purpose of this port is:
   - Initial assignment of IP addresses to the Ethernet port, maintenance port, the inband ATM IP address, and the IP address of the statistics manager. The ATM IP address belongs to the link between the PXM and the BPX 8600 series switch and applies to only the feeder application of the MGX 8250 switch. Note also that, for a stand-alone application, only the workstation connected to the switch can detect these IP addresses.

     Before you use the CiscoView or the Cisco WAN Manager (formerly StrataView Plus) network management applications, the IP addresses you intend for the switch must reside on the workstation in the *etc/hosts* file. Also, the text file *config.sv* on the workstation must contain the name of the switch you intend to be the gateway switch, the network ID, the network name, and so on. See the Cisco WAN Manager documentation for the file system requirements on the workstation.
   - Low-level control or troubleshooting. (You can also use the CLI through a window in the Cisco WAN Manager application.)

Note When you use the CLI, you must *type* all required parameters and any optional parameters before you press *Return* or *Enter*.

2. Through the Ethernet port, you can use a workstation running a Cisco network management application such as the Cisco WAN Manager or CiscoView application. Typically, the workstation on a LAN is co-located with the MGX 8250 switch.
3. Through the maintenance port (sometimes called the modem port), you can connect either a single workstation running an IP-based application or a terminal server that supports multiple workstations. The workstation must support SLIP. Typically, use of this port includes a modem because the switch resides at a remote location. The typical applications are software and firmware download or tasks that require low-level access.

Other ports exist on the PXM-UI. These ports support external clock sources and external, third-party audio or visual alarm systems. For information on the function of other ports on the PXM-UI, see Chapter 6, “Card and Service Configuration.”

The maintenance port and Ethernet port support IP-based applications. Through these ports, the following applications run:

- Telnet supports CLI command execution from any IP-based application window as well as a window in the Cisco WAN Manager application.
- TFTP lets you download firmware and upload and download configuration information.
- SNMP supports equipment management through the CiscoView application and connection management through the Cisco WAN Manager application.

Note Although the Cisco WAN Manager itself does not communicate with the maintenance port, this port supports IP-based communication.

Initial Switch Bring-Up

This section describes how to start up the switch for the first time. It begins with a PXM that has only boot-mode firmware. The descriptions tell you how to:

1. Establish communication with the switch.
2. Configure one or more boot-level IP addresses to make the switch available to the network.
3. Download PXM firmware.
4. Configure a new, switch-level Ethernet IP address for the PXM as needed or other SLIP or IP addresses.
5. Specify a name for the switch.
6. Specify the time on the switch.
7. Optionally configure a time zone for the Western Hemisphere, or configure a time zone relative to Greenwich Mean Time if the switch resides outside the Western Hemisphere.
8. Download firmware to the service modules.

If the PXM has no runtime (or "on-line") firmware image, begin with the boot-mode description in the section titled "Bringing Up a PXM with No Runtime Firmware." If the PXM has a runtime firmware image, go to the section titled "Configuring Switch-Level Parameters."

Bringing Up a PXM with No Runtime Firmware

The section describes the tasks for loading runtime firmware onto a PXM that has only a boot loader.

Step 1 Establish communication with the switch by doing one of the following:

- If you are using an ASCII terminal connected to the control port, the prompt for the next command is already present upon power-up. (If the display is skewed, make sure the terminal speed and PXM-UI port speeds are the same.)
- If you are using a utility such as Hyper Terminal on a PC, the firmware may reside on either a floppy or the hard drive.

Step 2 Execute the command **bootChange** to configure boot-level IP parameters.

If the switch has a redundant PXM, execute **bootChange** on each PXM to configure unique, boot-level IP addresses. (During the subsequent switch-level configuration, you must configure another Ethernet IP address that applies to *both* PXMs.) The following are the only parameters that are meaningful at this point, so press Return for other parameters:

- Mandatory "host name" is a name for the workstation. For the MGX 8250 switch, enter the letter "**c**."
- Ethernet IP address and subnet mask for the PXM LAN port are mandatory (see "inet on Ethernet" in the following example). Follow the IP address with a colon and a net mask. The net mask is eight hexadecimal numbers with no embedded periods. Do not type spaces on either side of the colon.
- If the workstation from which you download firmware is on a subnet other than the subnet of the PXM, enter a gateway IP address ("gateway inet").

Note the three editing functions near the top of the following example. Of these, typing a period to clear the current field is the most commonly used.

```
>bootChange
'.' = clear field;  '-' = go to previous field;  ^D = quit
boot device          : lnPci
processor number     : 0
host name            :c
file name            :
inet on ethernet (e) : 188.29.37.14:ffffff00
inet on backplane (b):
host inet (h)        :
gateway inet (g)     : 188.29.37.1
user (u)             :
ftp password (pw) (blank = use rsh):
flags (f)            : 0x0
target name (tn)     :
startup script (s)   :
other (o)            :
```

The PXM now has a boot-level IP address. Remember to repeat the **bootChange** command on the redundant PXM if the system has one.

Step 3 Enter **reboot** to reset the PXM.

The PXM is ready to receive a firmware image through the Ethernet port. Use the workstation for the next steps.

Step 4 At the workstation, you can optionally ping the PXM using the IP address to confirm that the switch is reachable.

Step 5 Establish communication with the PXM according to the user-communication device type. For example, at the prompt on a UNIX workstation, you could enter:

>**tip** -9600 /dev/ttya

The device specification could also be ttyb.

Step 6 Enter the **tftp** command with the IP address set at the ASCII terminal. For example, if the console port is connected to the serial port of the workstation:

$**tftp** 162.29.38.101

Step 7 At the tftp prompt, enter binary mode:

>**bin**

Step 8 From the directory where the firmware resides, enter the **put** command and include the arguments that specify the firmware release number, the statement that this firmware applies to the active PXM, and the release directory.

If necessary, refer to the release notes for new firmware release numbers. The entries are case-sensitive. For example:

>**put** pxm_*release_number*.fw POPEYE@PXM_ACTIVE.FW

where *release_number* is a decimal number in the form *n.n.nn*. Currently, the initial *n* typically is a "1." An example filename for PXM firmware is "pxm_1.0.03." Note that the download automatically includes the firmware for the standby PXM (if present). You can subsequently see POPEYE@PXM_STANDBY.FW in c:/FW.

Check the console to verify that the transfer completed and the checksum passed.

Step 9 Quit the tftp application, then go to the ASCII terminal connected to the control port:

>quit

Step 10 At the ASCII terminal, use **cd** to get to FW directory on the hard drive.

Step 11 List the contents to confirm that the firmware resides in the FW directory:

>cd "c:/FW"

>ll

Note these required quote marks are absent when you use the CLI after you reboot the PXM with its runtime image (see "Configuring Switch-Level Parameters").

Step 12 Enter the following:

>setPXMPrimary "*version*"

where *version* is the version number of the firmware. The name of a PXM firmware file has the format pxm_*version*.fw. For example: in PXM_1.0.03.fw, *version* is 1.0.03.

Step 13 Reboot the system again:

>reboot

A login prompt appears on the ASCII terminal. The PXM is now the same as a PXM that Cisco ships with a runtime firmware image.

Configuring Switch-Level Parameters

Except for adding a user and creating a password, all the tasks described in this section can be performed through the CiscoView application. For descriptions of the commands you enter at the CLI, see the *Cisco MGX 8000 Series Command Reference*. A representation of the MGX 8250 switch appears in Figure 5-1. A representation of the stand-alone application of the switch appears in Figure 5-2.

Figure 5-1 Feeder Application

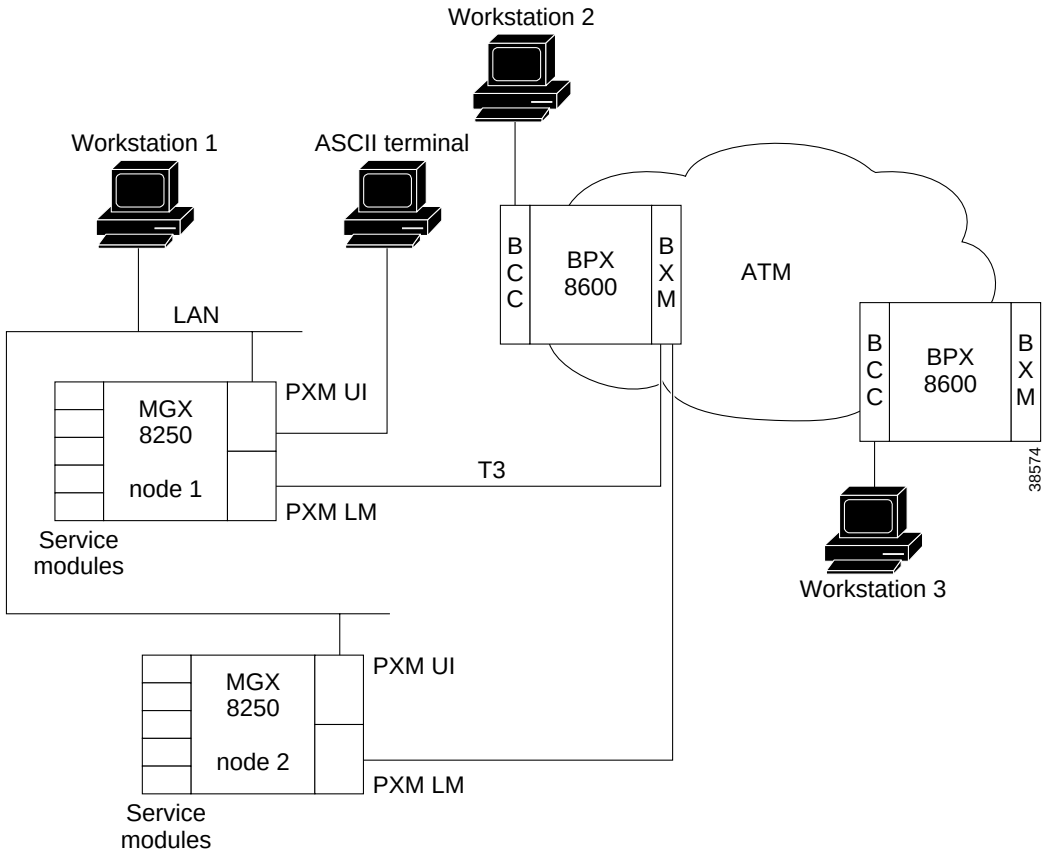

Figure 5-2 Stand-Alone Application

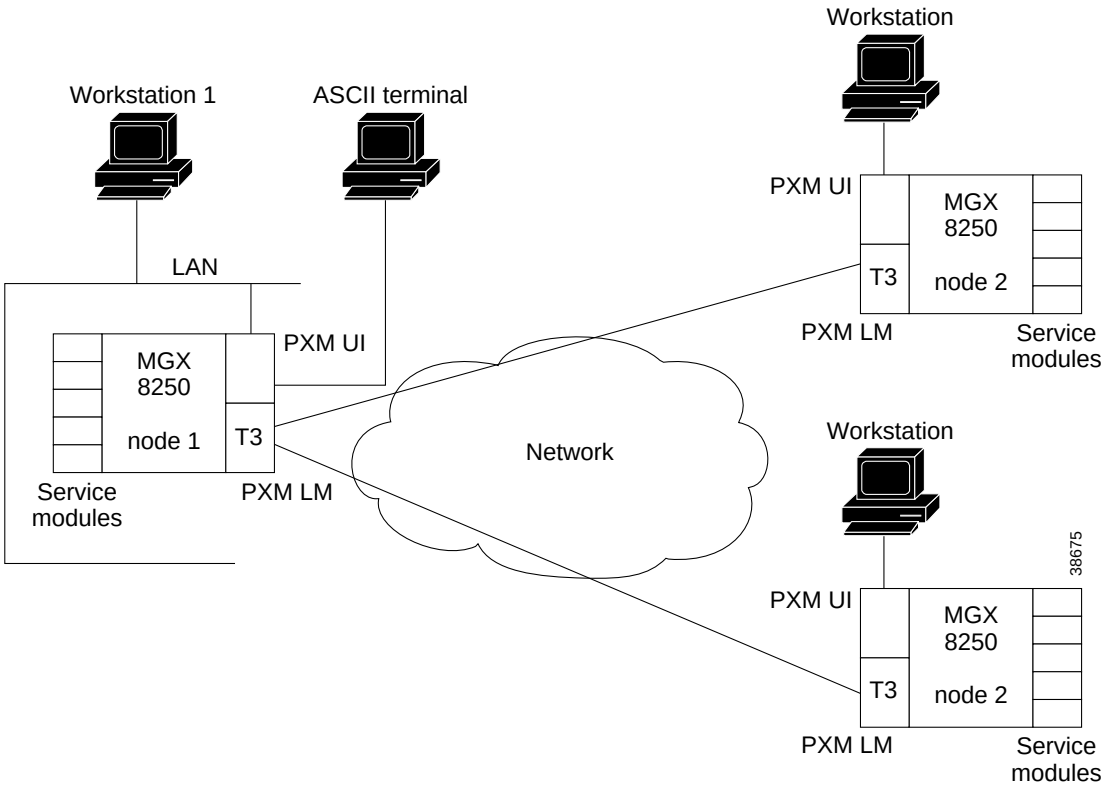

At the CLI prompt on the ASCII terminal:

Step 1 Enter the default login and password provided in the release notes.

The terminal displays the slot number of the PXM you have logged into by default:

card number [7]:

Step 2 Press **Return** to enter the CLI of this PXM.

At runtime, you could also enter the slot number of a service module or a standby PXM. In this case, the CLI prompt shows:

NODENAME.1.7.PXM.a>

where NODENAME shows that the node has no name; the slot number of the PXM is 7; and this PXM is active. The general format of the CLI prompt is:

nodename.1.*slot*.*cardtype*.a>

where *nodename* is the name of the node; the shelf number is always 1; *slot* is the card location; *cardtype* identifies the card; and the card state is active (a) or standby (s).

Step 3 Display the cards in the system:

NODENAME.1.7.PXM.a> **dspcds**

Step 4 Display any IP addresses in the system:

NODENAME.1.7.PXM.a> **dspifip**

Step 5 Change any IP addresses as needed:

NODENAME.1.7.PXM.a> **cnfifip** <*interface*> <*IP_Addr*> <*Net_Mask*> [*BrocastAddr*]

where *interface* is a number: 26 is the Ethernet (LAN AUI) port, 28 is the maintenance port (SLIP), or 37 for the ATM IP address (feeder application only). Note that *BrocastAddr* applies to only the Ethernet interface (number 26).

Note Check the Release Notes for any variations in how to configure IP addresses.

Step 6 Execute the **cnfname** command to assign a name to the switch:

UNKNOWN.1.7.PXM.a> **cnfname** <*node name*>

where *node name* is a case-sensitive name up to eight characters. For example:

UNKNOWN.1.7.PXM.a> **cnfname** cisco22

Step 7 Execute the **cnftime** command to specify the time on the switch:

cisco22.1.7.PXM.a> **cnftime** <*hh:mm:ss*>

where *hh* is the hour of the day in the range 1–24; *mm* is the minute of the hour in the range 1–60; and *ss* is the number of seconds in the minute and has a range of 1–60.

Step 8 Optionally configure a time zone for the node. Use **cnftmzn** to specify a time zone in the Western Hemisphere. To configure a time zone outside the Western Hemisphere, first specify Greenwich Mean Time (GMT) with **cnftmzn** then specify the offset from GMT by using **cnftmzngmt**:

- cisco22.1.7.PXM.a> **cnftmzn** <*timezone*>

where *timezone* is 1 for GMT, 2 for EST, 3 for CST, 4 for MST, 5 for PST.

- cisco22.1.7.PXM.a> **cnftmzngmt** <*timeoffsetGMT*>

where *timeoffsetGMT* is the offset in hours from GMT. The range of possible values for *timeoffsetGMT* is -12 through +12.

Step 9 Execute the **cnfstatsmgr** command to specify the IP address of the workstation that runs the Cisco WAN Manager application.

Before it sends statistics, the MGX 8250 switch must have the IP address of the workstation with this application. The syntax is:

>**cnfstatsmgr** <*IP_Addr*> where *IP_Addr* is the IP address of the workstation.

If the switch has a redundant PXM, it automatically receives the same IP addresses and configuration as the primary PXM. With the IP addresses in place, you can configure the logical ports for the broadband interface through the CiscoView application or the CLI.

Step 10 Add one or more users by executing **adduser** once for each new user.

Note that the access privilege level is case-sensitive as the syntax description indicates. After you enter the privilege level, the system prompts for a new password for the user. (This password parameter does not appear in the help information for **adduser**.)

adduser <*user_Id*> <*accessLevel*>

user_Id is 1–12 alphanumeric characters.

accessLevel is the case-sensitive privilege level. It can be ANYUSER or within the range GROUP1–GROUP5. For example, to specify a privilege level 2, type GROUP2.

After you enter a user-name and privilege level, the system prompts for a password. The password is a string of 5–15 characters. If you press Return without entering a password, the system assigns the default password "newuser."

Step 11 Optionally change your password or another user's password by executing:

cnfpasswd [*username*]

username is the name of another user whose password you are changing. That user must have a privilege level that is lower than your privilege. To change your own password, enter **cnfpasswd** with no *username*.

Step 12 To specify the switch as a feeder, execute the **cnfswfunc** command:

cnfswfunc <-*ndtype*>

and follow -ndtype with "fdr."

Step 13 Configure as needed an external clock by executing **cnfextclk**.

Step 14 Configure as needed double-speed clocks for individual cell buses by using **cnfcbclk**:

cnfcbclk <*cellBus*> <*clockRate*>

cellBus is a string in the range CB1–CB8 that identifies the cell bus.

clockRate is a number that identifies the rate in megahertz. Choices are 21 or 42.

The distribution of the eight cell buses follows.

- cell bus 1 (CB1) connects slots 1 and 2 to the PXM1
- cell bus 2 (CB2) connects slots 3 and 4 to the PXM1
- cell bus 3 (CB3) connects slots 5 and 6 to the PXM1
- cell bus 4 (CB4) connects slots 9 and 10 to the PXM1
- cell bus 5 (CB5) connects slots 11 and 12 to the PXM1
- cell bus 6 (CB6) connects slots 13 and 14 to the PXM1
- cell bus 7 (CB7) connects slots 17, 18, 19, 20, 21 and 22 to the PXM1
- cell bus 8 (CB8) connects slots 25, 26, 27, 28, 29 and 30 to the PXM1

In the top bay, each of the six cell buses serves two card slots. In the bottom bay, each of the two cell buses serves six card slots. Therefore, each top slot has three times the available bandwidth of the lower slots and is therefore better suited to the higher-speed cards. The bandwidth concentration for cell buses in the upper and lower bays is illustrated in Figure 5-3.

Figure 5-3 Bandwidth Concentration in Upper and Lower Bays

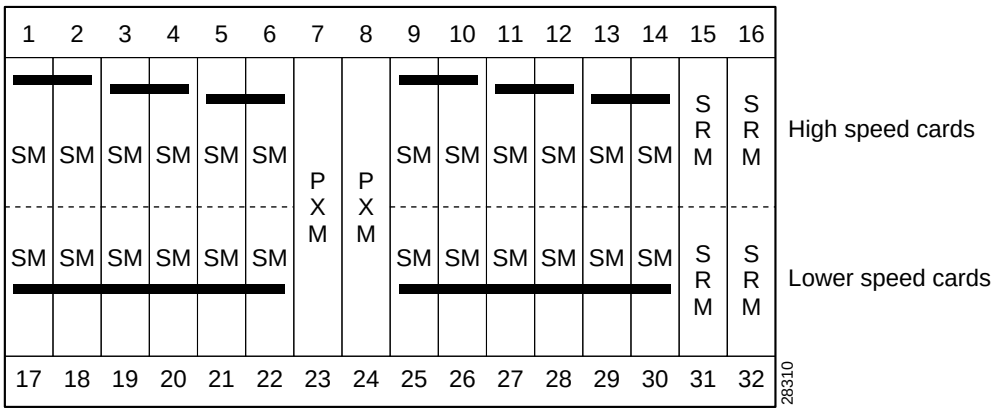

Downloading Firmware to a Service Module

This section describes how to download firmware for a service module from a workstation. The descriptions apply whether you are upgrading the existing firmware or downloading because no runtime firmware resides on the hard drive.

Service modules do not retain runtime firmware. The hard drive on the PXM may come with default firmware for the service modules, but the details of the customer order actually determine whether firmware is on the disk. If default firmware exists on the hard drive, the PXM downloads it upon power-up or when you reset the card, otherwise you can download firmware from the workstation according to the instructions that follow.

Note that if you download firmware from a workstation to the hard drive, the PXM does not automatically load the firmware to the card. You must reset the card (**resetcd** on the CLI) to download firmware from disk to the card. With the single execution of a command, you can load either generic firmware for all cards of a certain type or firmware destined to a specific slot.

To load service module firmware from a workstation to the hard drive on the PXM:

Step 1 Start the tftp application:

$**tftp** <*IP address*>

then

>**bin**

Step 2 To download generic firmware for a type of service module to the PXM hard drive:

>**put** *cardtype*.fw POPEYE@SM_1_0.FW

where *cardtype* is the firmware for a type of card; the shelf number always is 1; and the 0 represents the slot number for the purpose of generic download. An example of *cardtype.*fw is “frsm8t1e1_10.0.11.fw.” Note the space between “.fw” and “POPEYE.”

Step 3 To load slot-specific firmware at a particular card:

>**put** *cardtype*.fw POPEYE@SM_1_*slot*.FW

where *cardtype* is the firmware, and *slot* is the number of the card slot. Note the space between “.fw” and “POPEYE.” Repeat this step for each slot as needed.

Note Slot-specific firmware overwrites the current firmware at a slot.

With slot-specific firmware, the card does not come up if you do either of the following:

- Specify the wrong firmware, where the firmware specified by *cardtype* does not match the targeted card at *slot*.
- Insert a different card (which does not use the firmware specified for the slot).

An example command for downloading specific firmware for an FRSM-2CT3 in slot 3 is:

>**put** frsm2ct3_10.0.01.fw POPEYE@SM_1_3.FW

where “frsm2ct3_10.0.0” refers to the firmware for the FRSM-2CT3, and “3” is the slot.

Note See the Release Notes for current names of firmware files and release directories.

Step 4 When you have finished downloading firmware, enter **quit** to quit the tftp application.

Step 5 At the CLI on either the workstation or the ACSII terminal, display the firmware files. Note that the directory specification **ll** c:/FW has no quote marks.

cisco22.1.7.PXM.a> **ll** c:/FW

Step 6 If you want to download the firmware from the disk to a card, execute **resetcd**.

CHAPTER 6

Card and Service Configuration

This chapter describes how to configure the MGX 8250 cards and the services they support. Although the presumption for this chapter is that a plan exists for your network, it reviews some of the information that supports network planning. Generic instructions for inserting and removing cards appear in "Chapter 4, "Enclosure and Card Installation."

The services and applicable modules described in this chapter are:

- Physical and logical configuration of a broadband interface on the Processor Switching Module (PXM1) and, for a stand-alone switch, connection addition
- ATM service on the MGX-AUSM/B
- Frame Relay service on the following service modules:
  - MGX-FRSM-2CT3
  - MGX-FRSM-2T3
  - MGX-FRSM-E3
  - MGX-FRSM-HS2
  - MGX-FRSM-HS1/B
  - AX-FRSM-8T1 and AX-FRSM-8E1
- Circuit emulation service on the AX-CESM-8T1 and AX-CESM-8E1
- Redundancy and bulk distribution on the Service Resource Module-3T3 (MGX-SRM-3T3/B)

Note For information on the Route Processor Module (RPM), see the *Cisco Route Processor Module Installation and Configuration Guide*.

Tasks for Configuring Cards and Services

This section contains a general description of the sequence of tasks for configuring the cards and their services. It also contains details on how to configure resource partitions and add local connections and three-segment connections. Detailed descriptions of these tasks for individual cards appear in subsequent sections.

Modifying the Resource Partitioning

A resource partition at the card level consists of a number of logical connections (LCNs). At the port level, a resource partition consists of a percentage of bandwidth, a DLCI or VPI/VCI range, and the number of logical connection numbers (LCNs) available to a network control application. On the PXM1, the connections are global logical connections (GLCNs). By default, all resources on a card or logical port are available to any controller on a first-come, first-served basis. If necessary, you can modify the resource partitioning at the card level or logical port level. Port-level resource modification follows card-level modification, so the available port-level resources depend on whether and how much you change the card-level resource partitioning. You do not have to change the resource partitioning for the card before changing resource partitioning for a port.

The current network control application is Portable AutoRoute (PAR). Planning considerations should include the possibility of modifying the partitioning of resources for the interface. For example, the MGX 8250 switch has the capacity to support a Cisco Multiprotocol Label Switching (MPLS) controller or a Private Network to Network Interface (PNNI) controller.

Sequence of Configuration Tasks

In a new switch, the common approach is to configure the same aspect for all cards at once—adding logical ports to all applicable cards, for example. In contrast, the likely sequence for installing a single card is to begin with its card-level features and continue until you have configured every connection. The common tasks for a new switch are

1. Optionally configure the service modules (except the RPM) for redundancy. This card-level operation requires redundant cards and possibly an MGX-SRM-3T3/B.
2. Optionally configure resource partitioning for the whole card if the default partitioning does not fulfill the purpose of the card.
3. Activate physical lines.
4. Configure the line if default parameters are not appropriate.
5. Create the logical ports then modify them as needed.
6. Optionally configure resource partitions for a logical port if the default partitioning does not support the intended operation of the port.
7. Add connections then modify them as needed.

Rules for Adding Connections

This section describes the rules for adding local connections, three-segment connections, and management connections. The MGX 8250 switch can support:

- Local-only, digital access and cross-connect (DAX) connections
- Three-segment connections across an ATM or Frame Relay network
- IP management connections (stand-alone switches only)

A management connection is an inband IP connection that lets a workstation control a local or remote MGX 8250 switch through a service module rather than the Ethernet port on a PXM-UI. Although the rules include references to CLI syntax, they also apply to the Cisco WAN Manager application.

Rules for Adding a DAX Connection

A DAX con is a connection whose end points for the entire connection exist on the same switch. The following apply to the MGX 8250 switch:

1. On a feeder, a DAX con can exist between different service modules or the same service module.
2. A stand-alone switch supports DAX cons with one or both end points on the PXM1 in addition to DAX cons between service modules.
3. Either end-point can be the master.
4. The first end-point to add is the slave. The generic syntax is:

   addcon <*local parameters*>

   where *local parameters* are the port, DLCI or VPI and VCI, and mastership status. Slave is the default case, so you actually do not explicitly have to specify it. When you press Return, the system returns a connection identifier. The identifier includes the port and DLCI or VPI and VCI.

   Use the identifier to specify the slave end-point when you subsequently add the connection at the master end. The slave end-point is specified as the *remote parameters* in item To complete the DAX con, add the master end-point. The generic syntax is

   addcon <*local parameters*> <*remote parameters*>

   where *local parameters* are the port, DLCI or VPI and VCI, and mastership status (master in this case). The *remote parameters* are the items in the connection identifier that the system returned when you added the slave end-point.
5. If the end-point is a PXM1 port in a stand-alone switch, specify the slot as 0. The **addcon** command is the only command in which you specify the slot number for the PXM1 as 0.

Rules for Adding Three-Segment Connections

A three-segment connection consists of a local segment on each MGX 8250 switch at the edges of the network cloud and a middle segment across the network cloud. The MGX 8250 requirements are as follows:

1. For MGX 8250 feeders, the backbone must consist of BPX 8600series switches.
2. For MGX 8250 stand-alone switches, the backbone switches can be either BPX 8600series switches or switches from another manufacturer.
3. On a feeder, the local segment exists between a service module and the PXM1.
4. On a stand-alone switch, the local segment can be between a service module and a port on the PXM1 or just two ports on the PXM1.
5. For the local segment, add the connection at only the master end-point. The generic syntax is

   addcon <*local parameters*> <*remote parameters*>

   where *local parameters* are the port, DLCI or VPI and VCI, and mastership status (master in this case). The *remote parameters* are the current switch name, slot, port, and VPI and VCI of the slave end. For the PXM1 end points, specify the slot number as 0. The **addcon** command is the only command in which you specify the slot number for the PXM1 as 0.

Rules for Adding Management Connections

This section describes the requirements for adding an inband ATM PVC for managing an MGX 8250 stand-alone switch. A management connection lets a workstation connected through a router control either the local MGX 8250 switch or a remote MGX 8250 switch that has no workstation. The typical configuration has the connecting router feed an AUSM/B, FRSM, RPM, or PXM1 UNI port.

A management connection can be either a DAX con or a three-segment connection. The maximum number of management connections is eight. The DAX con exists between a service module or PXM1 UNI and port 34 of the local PXM1. PXM1 port 34 is a reserved port for management connections on a stand-alone switch. The network in Figure 6-1 shows FRSMs in a feeder application.

A three-segment management connection has a:

1. Local segment between a near-end service module or PXM1 UNI and a PXM1 port in the range 1–32.
2. Middle segment across the network cloud.
3. Local segment between a remote PXM1 port in the range 1–32 and port 34 of that same PXM1.

The path from “A” to “B” in Figure 6-1 consists of three segments. A segment exists between the FRSM and the PXM1 on each MGX 8250 switch. The middle segment exists between the BXMs at the edges of the ATM cloud and may traverse BPX 8600 via switches in the cloud. The VPI and VCI at each BPX8600 series switch connected to an MGX 8250 feeder must match the VPI and VCI on the slave end-point of the connected PXM1. The VPIs and VCIs at the end-points of the middle segment do not have to match. If you use the CLI rather than the Cisco WAN Manager application, add each segment through the CLI at each switch.

Figure 6-1 Frame Relay Connection Through an MGX 8250–BPX 8600 Series Network

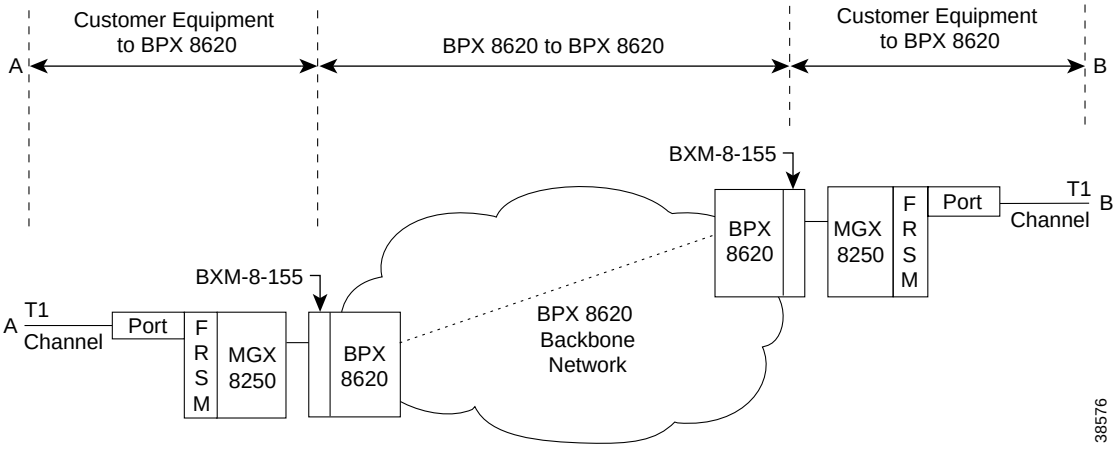

The Processor Switching Module

This section first describes how to activate and configure the card-level parameters, lines, and ports on the PXM1 uplink card then describes how to add connections to the PXM1 in a stand-alone switch. The descriptions tell you how to:

- Optionally modify the resource partitioning at the card level.

- Activate a line on the *uplink* card. On a stand-alone switch, you can activate more than one line if the uplink card has multiple lines. One physical line must be the trunk to a network routing switch.
- Optionally configure a clock source on the PXM1 or a service module. Note that a service module line must be active before you can configure it as a clock source. Refer to the section "Configuring Synchronization for the Switch" for more information.
- If the switch has a pair of SRMs for bulk distribution and you use the CLI rather than the CiscoView application, activate the SRM lines from the PXM1.
- Optionally modify the resource partitioning at the port level.
- Create logical ports.
- On a stand-alone switch, specify the cell header type. UNI cell headers typically apply where a workstation connects to a UNI port on the uplink card rather than a port on the PXM-UI card. Such an implementation is not common.
- On a stand-alone switch, add standard connections and optional management connections.
- On a stand-alone switch, configure Automatic Protection Switching (APS).
- For a feeder, execute steps on the connected BPX 8600 series switch to make the feeder an available resource in the network.

Note For a description of the bit error rate test (BERT) functions, see the section titled "Bit Error Rate Testing Through an MGX-SRM-3T3."

Configuring Synchronization for the Switch

This section defines the clock sources for the MGX 8250 switch, then describes how to configure each source.

The available clock sources are as follows:

- The *internal* clock comes from an oscillator on the PXM1. It is the default source when the switch first comes up and remains so until you specify a different clock source.
- The *trunk interface* clock originates on a BPX 8600 series switch or another vendor's switch and comes through the line on the PXM1's back card.
- An *external* clock source comes from an external timing source and arrives at the T1 or E1 clock connector on the PXM-UI. Frequently, the external device is a highly reliable, dedicated device that can provide a Stratum 2 or Stratum 3 clock. (As the subsequent configuration steps show, an additional step is necessary for an external clock source.)
- A *UNI interface* on a service module or PXM1 UNI port can be a clock source. A line must be active before you can specify it as a clock source.

The clock *types* are *primary*, *secondary*, and *tertiary*. For example, you could configure an external clock source as the primary source, a line as a secondary source, and the internal oscillator as the tertiary source. Note that if you specify a tertiary source, it is always the internal oscillator.

After the PXM1 broadband interfaces and the service module lines have been configured, you can configure the clock sources through the CiscoView application or the CLI. If you use the CLI, execute **cnfclksrc** on the active PXM1 one time for each clock source:

cnfclksrc <*slot.port*> <*clktyp*>

The parameter *slot.port* specifies the clock source. If a service module provides the source, *slot* is the slot number of the card, and *port* is the number of the line that provides the clock.

On the PXM1:

- *slot* is 7 regardless of where the active PXM1 resides.
- *port* for the inband clock is always 1.
- *port* for the external clock is always 35.
- *port* for the UNI line (stand-alone only) depends on the number of lines you have set up on the back card.

The value for *clktyp* is P for primary, S for secondary, T for tertiary, or N for null. The only purpose of null is to remove the clock configuration that currently applies to the specified source (*slot.port*).

Caution Be careful not to set multiple primaries and secondaries.

For example, to configure the inband interface as the primary clock source and an external clock device as the secondary source, execute the following two commands.

For an external clock source:

```
popeye1r.1.8.PXM.a > cnfclksrc 7.35 P
```

For an internal clock source:

```
popeye1r.1.8.PXM.a > cnfclksrc 7.1 S
```

Check the configuration by executing **dspclksrc**.

If you have specified an external clock source, use the CiscoView application or the CLI command **cnfextclk** to select the T1 or E1 line and the impedance of the line. The syntax for **cnfextclk** is:

cnfextclk <*ClockType*> <*Impedance*>

ClockType can be 1 for T1 or 2 for E1. *Impedance* can be 1 for 75 ohms, 2 for 100 ohms, or 3 for 120 ohms.

Configuring Card-Level Parameters, Lines, and Ports

This section describes how to configure card-level features, activate a physical line, and configure logical elements such as a port. If necessary, refer to the section titled “Tasks for Configuring Cards and Services” for background information on these types of tasks.

Step 1 Optionally, you can modify the resource partitioning for the whole card by executing **cnfcdrscprtn**. You can view resource partitioning through **dspcdrscprtn**.

cnfcdrscprtn <*number_PAR_conns*> <*number_PNNI_conns*> <*number_TAG_conns*>

- *number_PAR_conns* is the number of connections in the range 0–32767 for PAR
- *number_PNNI_conns* is the number in the range 0–32767 available to PNNI
- *number_TAG_conns* is the number of connections in the range 0–32767 for MPLS

For example, you could reserve 10,000 connections for each controller on a PXM1 with:

cnfcdrscprtn 10000 10000 10000

Step 2 Activate a line by executing **addln**:

addln -ds3 <*slot.line*> | -e3 <*slot.line*> | -sonet <*slot.line*>

- -ds3 indicates a T3 line parameter follows
- -e3 indicates an E3 line parameter follows
- -sonet indicates an OC-3 or OC-12 line parameter follows
- *slot* is 7 or 8 for the PXM1, one redundant pair of SRMs, execute **addln** for slots 15, 16, 31, and 32
- *line* has the range 1–4 but depends on the number of lines on the back card

For a feeder, you can activate only one line. For a stand-alone, you can activate more than one line if the back card has multiple lines. One line must serve as the trunk to the ATM network. With an OC-3, T3, or E3 card, remaining lines can serve as UNI ports to CPE.

Step 3 If necessary, modify the characteristics of a line by using **cnfln**.

Step 4 Configure logical ports for the physical line by executing **addport**. Execute **addport** once for each logical port. Related commands are **cnfport**, **dspports**, and **delport**.

addport <*port_num*> <*line_num*> <*pct_bw*> <*min_vpi*> <*max_vpi*>

- *port_num* is the number for the logical port. The range is 1–32 for user-ports or 34 for inband ATM PVCs that serve as management connections.
- *line_num* is the line number in the range 1–4, but depends on the type of uplink card.
- *pct_bw* is the percentage of bandwidth. The range is 0–100, and applies to both ingress and egress.
- *min_vpi* is the minimum VPI value. On a feeder, the range is 0–4095. On a stand-alone switch, the range is 0–255.
- *max_vpi* is the maximum VPI value. On a feeder, the range is 0–4095. On a stand-alone switch, the range is 0–255.

Using an example of 100% of the bandwidth on one logical port 1:

addport 1 1 100 1 200

where the first “1” is the logical port number; the second “1” is the line number on the PXM back card to which you are assigning this logical port number; “100” is the percentage of bandwidth this port has in both directions; and the VPI range is 1–200.

Step 5 If necessary, use **cnfportrscprtn** to modify port-level resources for a controller:

cnfportrscprtn <*port_no*> <*controller*> <*ingress_%BW*> <*egress_%BW*>

- <*min_VPI*> <*max_VPI*> <*min_VCI*> <*max_VCI*> <*max_GLCNs*>
- *port_no* is the logical port number in the range 1–32 for user-connections or 34 for inband ATM PVCs for network management.
- *controller* is a string identifying the network controller—“PAR,” “PNNI,” or “TAG.”
- *ingress_%BW* is the percentage of ingress bandwidth in the range 0–100.
- *egress_%BW* is the percentage of egress bandwidth in the range 0–100.
- *min_vpi* is the minimum VPI in the range 0–4095.
- *max_vpi* is the maximum VPI in the range 0–4095.
- *min_vci* is the minimum VCI in the range 0–65535.
- *max_vci* is the maximum VCI in the range 0–65535.
- *max_chans* is the maximum GLCNS in the range 0–32767.

Step 6 On a stand-alone switch, specify the cell header type as needed by executing **cnfatmln**.

cnfatmln <*line_num*> <*type*>

- *line_num* is the line number in the range 1–4
- *type* is either 2 for UNI or 3 for NNI (the default)

UNI cell headers typically apply where a workstation connects through a line to a PXM UNI port (rather than a SLIP-based port on the PXM-UI card). Such an implementation is not common, so **cnfatmln** usually is not necessary.

Step 7 Configure the 12IN1 dual-personality back card to be either V.35 or X.21 service by executing **cnfbctype**.

cnfbctype <*cardType*>

- *cardType is an integer that specifies the interface type.*

1 = X.21
2 = V.35

If the **cnnfbctype** command is never issued, the default back card type is V.35.

dspbctype

- Verify the back card personality with the command **dspbctype**.

Automatic Protection Switching on the PXM1

Automatic Protection Switching (APS) provides redundancy for an OC-3 or OC-12 line on the PXM1 if a failure occurs someplace other than the PXM1 front card. The failure can originate on the daughter card, uplink card, or any part of the physical line. With APS, the active PXM1 remains active and passes the cells from the failed line-path through the redundant line. The advantage of APS is that a line switchover requires significantly less time than a full PXM1 switchover. (A failure of the PXM1 front card in a redundant system causes the entire PXM card set to switch over.) As defined in GR-253, a variety of APS modalities are possible (see command summaries that follow).

The current requirements for APS service on an MGX 8250 switch are

- Redundant PXM1s (currently, the PXM1 does not support an APS configuration where the working and protection lines on the same uplink card)
- A “B” version of an OC-3 or OC-12 back card (SMLR-1-622/B, and so on)
- The connected network switch or CPE must also support APS

Initial APS specification consists of the *working* and *protection* slot and line and the *mode* for APS. After the initial APS specification, you can configure additional APS parameters, give commands for switching lines, and display the APS configuration. The CiscoView application and CLI provide access to the APS feature. For detailed descriptions of the CLI commands, see the *Cisco MGX 8000 Series Command Reference*. Note that APS is available only for the “B” versions of the SONET cards—SMLR-1-622/B, and so on. The applicable CLI commands are:

- **addapsln** to specify the lines and mode for APS
- **cnfapsln** to modify the following details of APS operation:
  - error thresholds
  - wait period before the PXM1 restores the working line after errors clear

  - uni-directional or bi-directional switchover, which specifies whether one or both directions of a line are switched when the criteria for a hard or soft failure are met for *one* direction
  - *revertive* recovery, where the working line automatically returns to operation after errors clear and any wait period has elapsed
  - enable use of K1 and K2 bytes in the line-level frame for equipment at both ends to exchange APS-related information
- **delapsln** to delete the APS configuration
- **dspapsln** to display the configuration for an APS-configured line
- **switchapsln** to issue commands for line switching that:
  - clear previous user requests
  - lock out (block) line switching
  - manually switch to the protection line if the following are true: no errors exist, the working line is active, and your request has an equal or higher priority than the last switch request
  - force a line switch regardless of existing errors the following are true: the working line is active and your request has an equal or higher priority than the last switch request
  - switch all traffic to either the working lines or protection lines so you can remove a card (applies to only the currently supported configuration of 1+1 mode on two uplink cards)

To specify APS, use the following syntax:

addapsln <*workline*> <*workingslot*> <*protectionline*> <*protectionslot*> <*archmode*>

where *workline* and *workingslot* identify the line and slot of the APS working line, and *protectionline* and *protectionslot* identify the protection line and slot. According to GR-253, the *archmode* identifies the type of APS operation. The mode definition includes:

1. 1+1 on one back card
2. 1+1 on two back cards
3. 1:1
4. Annex B

Currently, the only supported mode is 1+1 with two uplink cards (*mode*=2). With 1+1 APS, both the working line and the protection line carry duplicate data even though no error threshold has been exceeded or line break has occurred. This mode requires that two standard cables (rather than a Y-cable) connect at two ports on the equipment at the opposite end. With the two-card implementation, *workline* must be the same as *protectionline*.

Adding Connections on a PXM1 in a Stand-Alone Switch

This section describes the CLI commands for provisioning connections on a PXM1 in a stand-alone switch. Connection addition conforms to the rules for a standard connection or a management connection. (See “Rules for Adding Connections” earlier in this chapter.) In addition, this section describes the commands for modifying specific features for a connection and policing connections by way of usage parameter control (UPC).

The CLI commands correspond to functions in the Cisco WAN Manager application. The preferred CLI command is **addcon**. (If the application requires NSAP addressing, use **addchan** to add a connection and **cnfchan** to modify a connection. To see the syntax for these two commands, refer to the command reference.) On the PXM1 CLI:

Step 1 Execute the **addcon** command according to the following syntax:

addcon <*port_num*> <*conn_type*> <*local_VPI*> <*local_VCI*> <*service*> [*CAC*] [*mastership*] [*remoteConnId*]

- *port_no* is the logical port in the range 1–32 for a user connection or 34 for a management connection.
- *conn_type* is a number identifying the connection type—1 for VPC or 2 for VCC.
- *local_VPI* is the local VPI in the range 0–4095.
- *local_VCI* is the local VCI in the range 0–65535.
- *service* is a number in the range 1–4 to specify the type of service: 1=CBR, 2=VBR, 3=ABR, and 4=UBR.
- (Optional) *CAC* lets you turn off the loading affect of a connection on the aggregated load on a port.
- *mastership* specifies whether the end-point you are adding is the master or slave. 1=master. 2=slave (default). The syntax shows this parameter as optional because you need to enter it at only the master end. Slave is the default, so you do not need to specify it explicitly when entering a DAX con.
- *remoteConnId* identifies the connection at the slave end. The format for *remoteConnId* is *Remote_switchname.slot_num.remote_VPI.remoteVCI*.

Note The slot number of the active PXM1 is always 0 when you add a connection.

Step 2 If necessary, modify a connection by using **cnfcon**:

cnfcon <*conn_ID*> <*route_priority*> <*max_cost*> <*restrict_trunk_type*> [CAC]

- *conn_ID* identifies the connection. The format is *logical_port.VPI.VCI*.
- *route_priority* is the priority of the connection for rerouting. The range is 1–15 and is meaningful only in relation to the priority of other connections.
- *max_cost* is a number establishing the maximum cost of the connection route. The range is 1–255 and is meaningful only in relation to the cost of other connections for which you specify a maximum cost.
- *restrict_trunk_type* is a number that specifies the type of trunk for this connection. Specify 1 for no restriction, 2 for terrestrial trunk only, or 3 for satellite trunk only.
- *CAC* optionally lets you turn on or off the addition of the loading effect of a connection to the aggregated load on a port.

Step 3 As needed, specify usage parameter control according to the connection type. Use either **cnfupccbr**, **cnfupcvbr**, **cnfupcabr**, or **cnfupcubr**. This step defines the parameters for each of these commands. Note that the parameters for **cnfupcvbr** and **cnfupcabr** are the same. Also, the *polType* parameter has numerous variations in accordance with ATM Forum v4.0. For a list of these variations, see Table 6-1 after the syntax descriptions.

cnfupccbr <*conn_ID*> <*polType*> <*pcr[0+1]*> <*cdvt[0+1]*> <*IngPcUtil*> <*EgSrvRate*> <*EgPcUtil*>

- *conn_ID* identifies the connection. The format is *port.vpi.vci*.
- *polType* is the policing type. The choices are 4 or 5. See Table 6-1 for a description of these types.
- *pcr* is the peak call rate in the range 50–1412832 cps.
- *cdvt* is the cell delay variation tolerance in the range 1–5000000 microseconds.

- *IngPcUtil* is the percentage of utilization on the ingress. The range is 1–100.
- *EgSrvRate* is the egress service rate. The range is 50–1412832 cps.
- *EgPcUtil* is the percentage of utilization on the egress. The range is 1–100.

cnfupcvbr or **cnfupcabr** <*conn_ID*> <*polType*> <*pcr*[0+1] <*cdvt*[0+1]> <*scr*> <*mbs*> <*IngPcUtil*> <*EgSrvRate*> <*EgPcUtil*>

- *conn_ID* identifies the connection. The format is *port.vpi.vci*.
- *polType* is the policing type in the range 1– 5. See Table 6-1 for a list of these types.
- *pcr* is the peak call rate in the range 50–1412832 cps.
- *cdvt* is the cell delay variation tolerance in the range 1–5000000 microseconds.
- *scr* is the sustained cell rate. The range is 50–1412832 cps.
- *mbs* is the maximum burst size. The range is 1–5000000 cells.
- *IngPcUtil* is the percentage of utilization on the ingress. The range is 1–100.
- *EgSrvRate* is the egress service rate. The range is 50–1412832 cps.
- *EgPcUtil* is the percentage of utilization on the egress. The range is 1–100.

cnfupcubr <*conn_ID*> <*polType*> <*pcr*[0+1] < *cdvt*[0+1]> <*IngPcUtil*>

- *conn_ID* identifies the connection. The format is *port.vpi.vci*.
- *polType* is the policing type. The range is 3–5. See Table 6-1 for a list of these types.
- *pcr* is the peak call rate in the range 50–1412832 cps.
- *cdvt* is the cell delay variation tolerance in the range 1–5000000 microseconds.
- *IngPcUtil* is the percentage of utilization on the ingress. The range is 1–100.

Table 6-1 Policing Definitions According to Policing and Connection Type

Policing by Connection Type	ATM Forum TM spec. 4.0 conformance definition	PCR Flow (1st leaky bucket)	CLP tagging (for PCR flow)	SCR Flow (2nd leaky bucket)	CLP tagging (for SCR flow)
CBR *polType*=4	CBR.1 (PCR Policing only)	CLP(0+1)	no	off	n/a
CBR *polType*=5	When policing=5 (off)	off	n/a	off	n/a
UBR *polType*=3	UBR.1 when CLP setting=no	CLP(0+1)	no	off	n/a
UBR *polType*=4	UBR.2 when CLP setting=yes	CLP(0+1)	no	CLP(0)	yes
UBR *polType*=5	Policing is off	off	n/a	off	n/a

Table 6-1 Policing Definitions According to Policing and Connection Type (continued)

Policing by Connection Type	ATM Forum TM spec. 4.0 conformance definition	PCR Flow (1st leaky bucket)	CLP tagging (for PCR flow)	SCR Flow (2nd leaky bucket)	CLP tagging (for SCR flow)
VBR and ABR *polType*=1	VBR.1 1	CLP(0+1)	no	CLP(0+1)	no
VBR and ABR *polType*=2	VBR.2	CLP(0+1)	no	CLP(0)	no
VBR and ABR *polType*=3	VBR.3	CLP(0+1)	no	CLP(0)	yes
VBR and ABR *polType*=4	(when Policing=4)	CLP(0+1)	no	off	n/a
VBR and ABR *polType*=5	Policing is off	off	n/a	off	n/a

ATM Universal Service Module

The 8-port ATM Universal Service Module (MGX-AUSM/B-8T1 and MGX-AUSM/B-E1) is a multipurpose card set with eight T1 or E1 lines that support:

- ATM UNI with high port-density for the CPE—with AUSMs in all 24 service module slots, an MGX 8250 switch can support up to 192 individual T1 or E1 lines. An individual card set can support 1000 data connections and 16 management connections.
- Inverse multiplexing for ATM (IMA) that complies with ATM Forum v3.0 and v3.1—the 8-port AUSM can provide *N* x T1 or *N* x E1 logical ports up to maximum rates of 12 Mbps for T1 or 16 Mbps for E1.
- Classes of service—CBR, VBR, ABR, and UBR with per-VC queuing on ingress and multiple class-of-service queues on egress.
- Statistics collection.
- Virtual path connections (VPCs).
- Network synchronization derived from one of its lines.
- Bit error rate test (BERT) functionality with loopback pattern generation and verification on individual lines or logical port. For a description of the BERT functions, see the section titled “Bit Error Rate Testing Through an MGX-SRM-3T3.”
- 1:N redundancy for through the optional MGX-SRM-3T3/B card.
- Automatic card-restore.
- SNMP and TFTP to support card and connection management.
- Resource partitions for individual network control applications.

Using the CLI to Configure the Card, Lines, and Ports

You can activate and configure the card, the lines, and the ports on the AUSM series cards through the CiscoView application or the CLI. To perform connection-related tasks, use the Cisco WAN Manager application or the CLI. Refer to the documentation for these applications for task descriptions. Use the commands described in this section to:

- Optionally modify resource partitioning at the cardlevel
- Activate and configure a line
- Create and configure a logical port
- Optionally modify resource partitioning at the portlevel
- Configure usage parameters
- Configure queue depths
- Configure the ForeSight feature
- Configure a line as a clock source

On the CLI of the AUSM/B:

Step 1 If necessary, modify the resource partitioning for the whole card by executing the **cnfcdrscprtn** command. You can view resource partitioning through **dspcdrscprtn**.

cnfcdrscprtn <*number_PAR_conns* | *number_PNNI_conns* | *number_TAG_conns*>

- *number_PAR_conns* is the number of connections in the range 0–1000 for PAR.
- *number_PNNI_conns* is the number of connections in the range 0–1000 for PNNI.
- *number_TAG_conns* is the number of connections in the range 0–1000 for MPLS.

For example, you could reserve 300 connections for each controller on the AUSM with:

cnfcdrscprtn 300 300 300

Step 2 Activate a physical line by using **addln** for each of the eight lines as needed:

addln <*line_number*>

Step 3 Optionally, use the **cnfln** command to specify line coding, line length, and clock source:

cnfln <*line_num*> <*line_code*> <*line_len*> <*clk_src*> [*E1-signalling*]

Step 4 Execute **upport** to activate the logical operation of the line:

upport <*port_number*>, where *port_number* is in the range 1–8.

Step 5 If necessary, execute **cnfportq** to modify the egress queues:

cnfportq <*port_num*> <*q_num*> <*q_algo*> <*q_depth*> <*clp_high*> <*clp_low*> <*efci_thres*>

port_num is the logical port number in the range 1–8.

q_num is the queue number in the range 1–16; 0 is the default for **addchan**.

1=CBR
2=VBR
3=ABR
4=UBR

q_algo is a number to specify the queue algorithm:

0=disable queue
1=high priority—always serve
2=best available
3=minimum guaranteed bandwidth
4=minimum guaranteed bandwidth with maximum rate shaping
5=CBR with smoothing

q_depth is the maximum queue depth in the range 1–16000 cells.

clp_high is the high cell loss priority in the range 1–16000 cells.

clp_low is the low cell loss priority in the range 1–16000 cells.

efci_thres is the EFCI threshold in the range 1–16000 cells.

Step 6 If necessary, configure resources at the port level by executing **cnfportrscprtn**. Use **dspportrscprtn** to see the current resource partitioning.

cnfportrscprtn <*port_num*> <*controller*> <*ingress_%BW*> <*egress_%BW*> <*number_of_cons*> <*VPImin/VPImax*> [*VCImin/VCImax*]

- *port_num* is the port number in the range 1–8.
- *controller* is a number representing the controller: 1=PAR, 2=PNNI, and 3=MPLS.
- *ingress_%BW* is the percentage of ingress bandwidth in the range 0–100.
- *egress_%BW* is the percentage of egress bandwidth in the range 0–100.
- *number_of_cons* is the maximum number of connections on the port.
- *VPImin/VPImax* is the minimum and maximum VPI numbers.
- *VCImin/VCImax* is the optional specification for VCI range.

Using the CLI to Configure Inverse Multiplexing

The command sequence for configuring the IMA feature:

Step 1 **addln** on all constituent links.

Step 2 **cnfln** if necessary.

Step 3 **addimagrp** (or addaimgrp) to create the IMA group by using the following syntax:

addimagrp <*group_num*> <*port_type*> <*list_of_links*> <*minNumLink*>

group_num is a number for IMA group. The range is 1–8.

port_type is the port type: 1=UNI, 2=NN1.

list_of_links is the list of links to be included in the group. Separate each link number by a period.

minNumLink is the minimum number of links in the range 1–8 to form a group.

For example: the following creates IMA group 1 with lines 3, 4, and 5. The minimum is 3.

```
addimagrp 1 3.4.5 3
```

IMA-related commands are **dspimagrp**, **dspimagrpcnt**, **dspimagrps**, **dspimainfo**, and **dspimalncnt**. Refer to the *Cisco MGX 8800 Series Switch Command Reference* for descriptions.

Adding and Configuring Connections on the AUSM/B

You can add and modify connections through the Cisco WAN Manager or the CLI. Refer to applicable documentation if you use the WAN Manager application. This section describes how to add an ATM connection through the CLI according to the rules for adding a standard connection or a management connection in the form of either a DAX con or a three-segment connection. See "Rules for Adding Connections" earlier in this chapter.

On the CLI of the AUSM/B:

Step 1 Execute the **addcon** command.

When you add a connection with **addcon**, the system automatically assigns the next available *channel number*, so **addcon** does not require it. However, some related commands require a channel number—**cnfchanfst**, **cnfchanq**, and **cnfupcabr**, for example. To see the channel number after you add a connection, use **dspcons**.

The **addcon** syntax is:

addcon <*port_number*> <*vpi*> <*vci*> <*ConType*> <*SrvType*> [*Controller_Type*] [*mastership*] [*remoteConnID*]

port number port number is in the range 1–8.

vpi VPI has a value in the range 0–255.

vci VCI can be in the range 0–65535 for a VCC or * for a VPC.

Conn type is the connection type: 0=VCC, and non-0 is the local ID of a VPC in the range 1–1000.

Service Type is the service type: 1=CBR, 2=VBR, 3=ABR, and 4=UBR.

mastership is the mastership status of the end-point. 1=master, and 2=slave. The default is slave, so you actually do not need to type a 2.

Controller_Type is the optional controller specification. 1=PAR (the default} 2=SPVC (PNNI).

connID is entered at only the master end and consists of the switch name, slot number, port number, VCI, and VPI of the slave end.

Step 2 To configure usage parameter control (UPC) for the connection (channel), use **cnfupccbr**, **cnfupcvbr**, **cnfupcabr**, or **cnfupcubr**. Use **dspcons** to obtain the channel number.

cnfupccbr <*port.vpi.vci*> <*enable/disable*> <*pcr*[0+1]> <*cdvt*[0+1]> <*IngPcUtil*> <*EgSrvRate*> <*EgPcUtil*>

port.vpi.vci identifies the connection.

enable/disable is the UPC enable: 1=disable, 2=enable.

pcr[0+1] is the peak cell rate. Without IMA, the range is as follows:

T1, 10–3622 cells per second
E1, 10–4528 cells per second
clear E1, 10–4830 cells per second

For IMA, multiply the line rate by the number of links.

cdvt[0+1] is the cell delay variation tolerance for cells with CLP=0 and CLP=1. The range is 1–250000 micro seconds.

IngPcUtil is the percent utilization on the ingress. The range is 1–127. The default is 0.

EgSrvRate is the egress service rate. Without IMA, the range is as follows:

T1, 10–3622 cells per second
E1, 10–4528 cells per second
clear E1, 10–4830 cells per second

For IMA, multiply the line rate by the number of links.

EgrPcUtil is the percent utilization on the egress. The range is 1–127. The default is 0.

cnfupcvbr has the same syntax and parameters as **cnfupcabr**

cnfupcvbr or **cnfupcabr** <*port.vpi.vci*> <*enable*> <*pcr*[0+1]> <*cdvt*[0+1]> <*scr*> <*scr_police*> <*mbs*> <*IngPcUtil*> <*EgSrvRate*> <*EgPcUtil*> <*clp_tag*>

port.vpi.vci identifies the connection.

enable is the enabled/disable for UPC: 1=Disable, 2=Enable.

pcr is the peak cell rate. Without IMA, the range is as follows:

T1, 10–3622 cells per second
E1, 10–4528 cells per second
clear E1, 10–4830 cells per second

For IMA, multiply the line rate by the number of links.

cdvt cdvt[0+1] is the cell delay variation tolerance for cells with CLP=[0+1]. The range is 1–250000 microseconds.

scr is the peak cell rate. Without IMA, the range is as follows:

T1, 10–3622 cells per second
E1, 10–4528 cells per second
clear E1, 10–4830 cells per second

For IMA, multiply the line rate by the number of links.

scr_police specifies the type of scr policing: 1= CLP[0] cells, 2=CLP[0+1] cells, and 3=no SCR policing.

mbs is the maximum burst size: the range is 1–5000 cells.

IngPcUtil is the percent utilization on the egress. The range is 1–127. The default is 0.

EgSrvRate is the egress service rate. Without IMA, the range is as follows:

T1, 10–3622
E1, 10–4528
clear E1, 10–4830

For IMA, multiply the line rate by the number of links.

EgrPcUtil is the percent utilization on the ingress. The range is 1–127. The default is 0.

clp_tag is the enable for CLP tagging: 1=disable, 2=enable.

cnfupcubr <*port.vpi.vci*> <*enable*> <*pcr*[0+1]> <*cdvt*[0+1]> <*IngPc*> <*util*> <*clp_tag*>

port.vpi.vci identifies the connection.

enable is the enabled/disable for UPC: 1=Disable, 2=Enable.

pcr is the peak cell rate. Without IMA, the range is:

T1, 10–3622
E1, 10–4528
clear E1, 10–4830

For IMA, multiply the line rate by the number of links.

cdvt cdvt[0+1] is the cell delay variation tolerance for cells with CLP=[0+1]. The range is 1–250000 microseconds.

scr is the peak cell rate. Without IMA, the range is:

T1, 10–3622
E1, 10–4528
clear E1, 10–4830

For IMA, multiply the line rate by the number of links.

scr_police specifies the type of scr policing: 1= CLP[0] Cells, 2=CLP[0+1] cells, and 3=no SCR policing.

mbs is the maximum burst size: the range is 1–5000 cells.

IngPc is the percent utilization on the ingress. The range is 1–127. The default is 0.

hclp_tag is the enable for CLP tagging: 1=disable, 2=enable.

Step 3 If the system has the ForeSight feature, use **cnfchanfst** to configure it.

cnfchanfst <*port.vpi.vci*> <*enable*> <*fgcra_enable*> <*ibs*> <*pcr*> <*mcr*> <*icr*>

port.vpi.vci identifies the connection.

enable is the enabled/disable for the ForeSight feature: 1=disable, 2=enable.

fgcra_enable is the enabled/disable for the frame-based generic cell rate algorithm: 1=disable, 2=enable.

ibs is the initial burst size in the range 0–5000 cells.

pcr is the peak cell rate. Without IMA, the range is:

T1, 10–3622
E1, 10–4528
clear E1, 10–4830

For IMA, multiply the line rate by the number of links.

mcr is the minimum cell rate. Without IMA, the range is:

T1, 0–3622
E1, 0–4528
clear E1, 0–4830

For IMA, multiply the line rate by the number of links.

icr is the initial cell rate. Without IMA, the range is as follows:

T1, 0–3622
E1, 0–4528
clear E1, 0–4830

For IMA, multiply the line rate by the number of links.

Step 4 If necessary, change the queue depths by using **cnfchanq**.

cnfchanq <*port.vpi.vci*> <*discard_option*> <*vc_q_depth*> <*clp_thresh_high*> <*clp_thresh_low* | *epd_threshold*> <*efci_thresh*>

port.vpi.vci identifies the connection.

discard_option is either 1 for CLP hysteresis or 2 for framebased.

vc_q_depth is the ingress queue depth in the range 1–16000 cells.

clp_thresh_high is the CLP high threshold in the range 1–16000 cells.

clp_thresh_low or *epd_threshold*

is the CLP low threshold in the range 1–16000 cells for CLP hysteresis-based discard.

or

is the EPD threshold in the range 1–16000 cells frame-based discard.

efci_thresh is the EFCI threshold in the range 1–16000 cells.

BPX 8600-to-BPX 8600 Segment

For the middle segment, be sure to use the connection type as the local segments on the MGX 8250 switch (CBR, VBR, ABR, or UBR). The parameters directly map from those specified at the connection end-point.

Frame Service Module Features

This section describes the features available on each of the Frame Service Modules (FRSMs). For descriptions of how to set up these cards and add connections, see the subsequent section titled "Configuring Frame Relay Service." This section consists of:

- Brief descriptions of each model of the FRSM
- Lists of features shared by all FRSMs
- Lists of features for individual models of the FRSM
- Brief descriptions of the services

Introduction

The primary function of the FRSM is to convert between the Frame Relay–formatted data and ATM/AAL5 cell–formatted data. For an individual connection, you can configure network interworking (NIW), service interworking (SIW), ATM-to-Frame Relay UNI (FUNI), or frame forwarding. An FRSM converts the header format and translates the address for:

- Frame Relay port number and DLCI
- ATM-Frame UNI (FUNI) port number and frame address or frame forwarding port
- ATM virtual connection identifier (VPI/VCI)

Types of Frame Service Modules

The models of the FRSM include 8-port T1 and E1 cards and very highspeed modules. Higher speed modules support unchannelized E3 and HSSI as well as channelized and unchannelized T3.

Very High Speed Frame Service Modules

The Very High Speed Frame Service Modules (FRSM-VHS) support Frame Relay services on T3, E3, and HSSI interfaces. Up to 24 FRSM-VHS cards in any combination can operate in the switch. They should occupy upper slots whenever possible. The FRSM-VHS group on an MGX 8250 switch consists of:

- MGX-FRSM-2CT3, which provides channelized Frame Relay service for up to 4000 user connections over two T3 lines on the BNC-2T3 back card (or line module).
- MGX-FRSM-2T3E3, which provides unchannelized (clear-channel) Frame Relay service for up to 2000 user connections over two T3 lines (44.736 Mbps each) or two E3 lines (34.368 Mbps each) on a BNC-2T3 or BNC-2E3 back card. The MGX-FRSM-2T3E3 can also support subrate T3 on Digital Link equipment or E3 on Digital Link equipment for tiered DS3 on each physical port.

Note Subrate capability is not supported on Kentrox equipment.

- MGX-FRSM-HS2, which provides unchannelized Frame Relay service for up to 2000 user-connections over two HSSI lines on the SCSI2-2HSSI back card. The maximum rate for the card is 70 Mbps. Each port can operate either as DTE or DCE with incremental rates of NxT1 or NxE1 up to 52 Mbps.

Eight-Port Channelized and Unchannelized Frame Service Modules for T1 and E1

The AX-FRSM-8T1 and AX-FRSM-8E1 provide unchannelized Frame Relay service for up to 1000 connections on eight T1 or E1 lines. The AX-FRSM-8T1c and AX-FRSM-8E1c provide channelized service for up to 1000 connections. Fewer connections are possible with any form of LMI.

Four-Port Unchannelized Frame Service Module for V.35 or X.21

The MGX-FRSM-HS1/B provides unchannelized Frame Relay service on a maximum of 200 connections across four V.35 or X.21 interfaces. The maximum throughput for the card is 16 Mbps. The maximum rate on one line is 8 Mbps. Without the cost of a T3 or E3 card, the MGX-FRSM-HS1/B provides greater than T1 or E1 speeds on a port as well as a choice of 50 line rates in a range of 48 Kbps–8 Mbps.

Frame Service Module Features

This section first lists the features common to all FRSM models, then lists the features of each model. All FRSMs support:

- Frame Relay-to-ATM Network Interworking (NIW) as defined in FRF.5.
- Frame Relay-to-ATM Service Interworking (SIW) with or without translation as in FRF.8.
- Frame forwarding.
- ATM Frame-UNI.
- Maximum frame sizes of 4510 bytes for Frame Relay and 4096 bytes for ATM-FUNI.
- Per-virtual-circuit (VC) queuing in the ingress direction (toward the cell bus). Traffic arriving at the network on a connection has a dynamically assigned buffer at the entrance to the switch. Buffer size depends on the amount of traffic and the service-level agreement (SLA).
- Advanced buffer management. When a frame arrives, the depth of the queue for the LCN is compared against the peak queue depth scaled down by a specified factor. The scale-down factor depends on the amount of congestion in the free buffer pool. As the free buffer pool begins to empty, the scale-down factor is increased, preventing an excessive number of buffers from being held up by any single LCN.
- Multiple, priority-level queuing to support class of service on the egress. The FRSM services egress queues according to a weighted priority. The priority depends on the percentage of logical port bandwidth needed by all connections of a particular type on a port. The FRSM supports a:
  - High-priority queue
  - Real-time Variable Bit Rate (rt-VBR) queue
  - Common queue for non-real-time Variable Bit Rate (nrt-VBR) and ABR connections
  - UBR queue
- Initial burst per channel. After a period of silence, the FRSM sends a configurable number of bytes at a peak service rate.
- The ForeSight option (except on MGX-FRSM-HS1/B). This Cisco mechanism for managing congestion and optimizing bandwidth monitors the utilization of ATM trunks. It proactively adjusts the bandwidth for connections to avoid queuing delays and cell discards.
- Consolidated Link Layer Management (CLLM), an out-of-band mechanism to transport congestion related information to the far end.

- Dual leaky bucket policing. Within the basic parameters such as committed burst, excess burst, and CIR, incoming frames go into two buckets: those to be checked for compliance with the committed burst rate and those to be checked for compliance with the excess burst rate. Frames that overflow the first bucket go into the second bucket. The buckets "leak" by a certain amount to allow for policing without disruption or delay of service.
- Standards-based management tools. Each FRSM supports SNMP, TFTP for configuration and statistics collection, and a command line interface. The Cisco WAN Manager application provides full graphical user interface support for connection management. The CiscoView application provides equipment management.
- MGX 8800 series network management functions, including image download, configuration upload, statistics, telnet, UI, SNMP, trap, and MIBs.
- OAM features: OAM F5 AIS, RDI, end-to-end or segment loopback as well as LMI and Enhanced LMI (ANNEX A, ANNEX D, Strata LMI).
- Hot standby with 1:1 redundancy (see sections for individual FRSM card types).
- Resource partitioning at the card level or port level.
- Bit error rate test (BERT) functions for all card types except the HSSI card types. For a description of BERT on the MGX-FRSM-2T3E3, see the forthcoming section titled "Bit Error Rate Testing on an Unchannelized T3 or E3 FRSM." Running a BERT session on an MGX-FRSM-2CT3 or an 8-port FRSM requires a set of MGX-SRM-3T3s in the system. For a description of BERT on these cards, see the section titled "Bit Error Rate Testing Through an MGX-SRM-3T3."
- User-selectable weighted fair queuing or fixed-rate queuing. The user can select either fixed-rate queuing to provide highest egress port speed while reducing quality of service or weighted fair queuing to provide maximum quality of service but slower egress port speed. This feature applies to the FRSM-2CT3, FRSM-2T3E3, and FRSM-HS2 cards.
- Subrate support is provided for the The MGX-FRSM-2T3E3 card. This feature applies to the MGX-FRSM-2T3E3 card only when used with Digital Link equipment.

Note Subrate capability is not supported on Kentrox equipment.

- Zero CIR Service for FRSM-VHS and FRSM-8T1 and FRSM-8E1 cards

MGX-FRSM-2CT3 Features

The specific features are:

- Up to 4000 user-connections
- Two T3 lines
- Up to 256 logical ports
- Logical port speed from DS0 56 Kbps through DS1 1.536 Mbps
- Support for five Class of Service (CoS) queues (high priority, rt-VBR, nrt-VBR, ABR, UBR)
- Supports Hot Standby with less than one second switchover using 1:1 redundancy through Y-cable redundancy (no Service Resource Module required)
- OAM Continuity Traffic Generation Test for use on defective PVCs

MGX-FRSM-2T3E3 Features

The specific features are:

- Up to 2000 user-connections
- Two T3 or E3 lines coinciding with two logical ports
- ADC Kentrox and Digital Link methods for supporting fractional T3 or E3 ports
- Maximum possible number of DLCIs per port by using the Q.922 two-octet header format
- Support for five Class of Service (CoS) queues (high priority, rt-VBR, nrt-VBR, ABR, UBR)
- Supports Hot Standby with less than one second switchover using 1:1 redundancy through Y-cable redundancy (no Service Resource Module required)
- Fractional T3 speeds available through either the Digital Link or ADC Kentrox method
- Supports running lines at subrates when used with Digital Link equipment
- OAM Continuity Traffic Generation Test for use on defective PVCs

MGX-FRSM-HS2 Features

The specific features are:

- Up to 2000 user-connections
- Maximum two logical ports
- Two HSSI lines with configurable line speeds in multiples of 56 Kbps or 64 Kbps
- Selectable DTE or DCE mode for each port
- In DCE mode, per port clock speeds of NxT1 and NxE1 up to 52 Mbps
- Various DTE/DCE loopback operations
- Maximum possible number of DLCIs per port by using the Q.922 two-octet header format
- Supports Hot Standby with less that one second switchover using 1:1 redundancy through a Y-cable

MGX-FRSM-HS1/B Features

The specific features and characteristics are:

- Up to 200 data connections
- In addition to data connections, support for:
  - LMI according to ITU-T Q.333 Annex A and ANSI T1.617 Annex D
  - OAM messaging
- Total card throughput of 16 Mbps
- Choice of operating card as either X.21 or V.35
- Maximum of 8 Mbps per line
- Choice of DTE or DCE mode for each line
- A maximum frame size of 4510 bytes
- One-to-one mapping between a logical port and a physical line
- Support for metallic (internal) loopback (ITU-T type 1)

- V.35-specific alarms (in addition to standard alarms such as LOS, and so on):
  - Inactive DCD and CTS signals in DTE mode (red alarm)
  - Inactive RTS signal in DCE mode (red alarm)
  - Selected line type (through **cnfln** on the CLI, for example) and the attached cable are incompatible (red alarm)
  - Disconnected cable, such as a disconnect at the far end (creating LOS, a red alarm)
  - No cable attached (a red alarm)
- Support for ANSI/EIA/TIA-613-1993 and ANSI/EIA/TIA-612-1993

Eight-Port FRSM Features

The specific features are:

- Up to 1000 user-connections.
- Fractional FRSMs support a single 56-Kbps or multiple 64-Kbps user-ports (FR-UNI, FR-NNI, FUNI, and frame forwarding) per T1 or E1 line. Channelized FRSMs (AX-FRSM-8T1c and AX-FRSM-8E1c) support multiple 56 Kbps or Nx64 Kbps user-ports per line up to the physical line bandwidth limit.
- Bulk distribution for T1 only through the MGX-SRM-3T3. See the “Service Resource Module” section in this chapter.
- Redundancy support: the MGX-SRM-3T3 can provide 1:N redundancy for T1 or E1 operation. If the FRSM uses an SMB-8E1 back card, 1:1 redundancy is also available through Y-cabling.
- Supports OAM Loopback non-intrusive test
- Supports zero CIR service

Description of Connection Types on the FRSM

The following sections describe NIW, SIW, FUNI, and frame forwarding. Topics include translation and congestion management.

Frame Relay–to-ATM Network Interworking

Frame Relay–to-ATM network interworking (NIW) supports a permanent virtual connection (PVC) between two Frame Relay users over a Cisco network or a multi-vendor network. The traffic crosses the network as ATM cells. To specify NIW for a connection, add the connection with a *channel type* of “network interworking.” For an illustration of a BPX 8620 network with NIW connections, see Figure 6-2.

Figure 6-2 BPX 8620 Network with NIW Connections

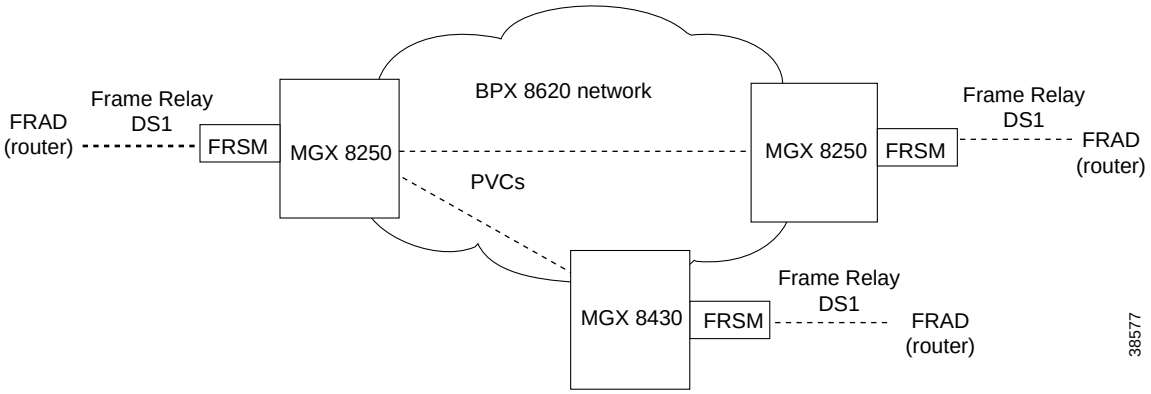

In addition to frame-to-cell and DLCI-to–VPI/VCI conversion, the NIW feature maps cell loss priority (CLP) and congestion information from Frame Relay-to-ATM formats. Subsequent sections contain the details. You can modify the CLP and congestion indicators for individual connections.

Congestion Indication for NIW Connections

You can modify the CLP and congestion indicators for individual connections. On the CLI., use the **cnfchanmap** command. In the Frame Relay–to-ATM direction, you can configure each Frame Relay-ATM NIW connection for one of the following CLP-to-DE mapping schemes:

- DE bit in the Frame Relay frame is mapped to the CLP bit of every ATM cell generated by the segmentation process.
- CLP is always 0.
- CLP is always 1.

In the ATM-to–Frame Relay direction, you can configure each Frame Relay/ATM NIW connection for one of the following CLP-to-DE mapping schemes:

- If at least one ATM cell from a frame has CLP=1, the DE field of the Frame Relay frame is set.
- No mapping from CLP to DE.

Congestion on the Frame Relay/ATM network interworking connection is flagged by the EFCI bit. The EFCI setting depends on the direction of the traffic. In the Frame Relay–to-ATM direction, EFCI is always set to 0. In the ATM-to–Frame Relay direction, the FECN bit of the Frame Relay frame is set if the EFCI field in the last received ATM cell of a segmented frame is set.

PVC Status Management

The management of ATM layer and FR PVC status management can operate independently. The PVC status from the ATM layer is used when determining the status of the FR PVC. However, no direct actions of mapping LMI A bit to OAM AIS is performed.

Frame Relay–to-ATM Service Interworking

By specifying a service interworking (SIW) channel type when you add a Frame Relay PVC to an FRSM, all data is subject to SIW translation and mapping in both the Frame Relay–to-ATM and ATM-to–Frame Relay directions. A BPX 8620 network with SIW connections appears in Figure 6-3.

Figure 6-3 BPX 8600 Series Network with SIW Connections

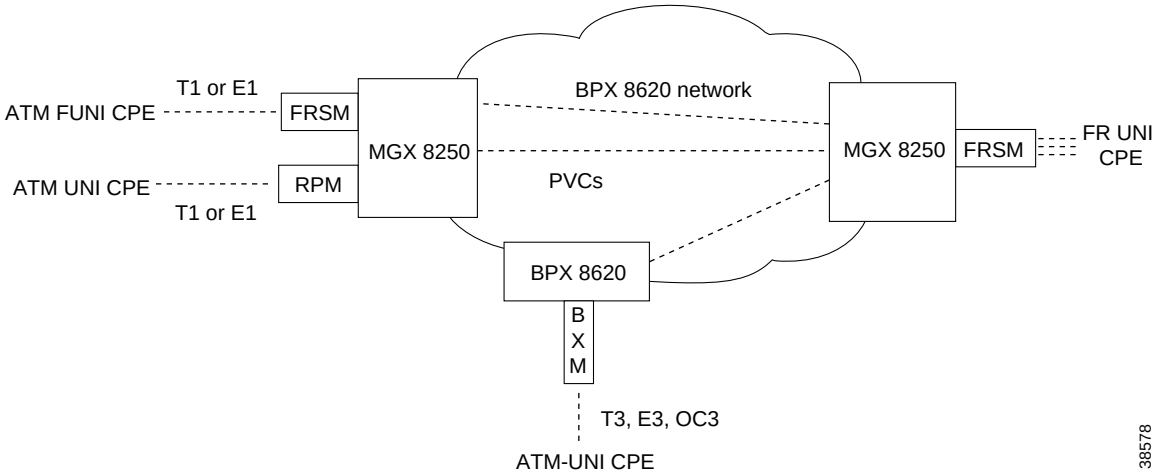

In Figure 6-3, an MGX 8250 switch on the right has three Frame Relay SIW connections terminating on an FRSM. Three far-end terminations for these connections appear in other parts of Figure 6-3:

- ATM FUNI (framed UNI) port on an FRSM
- ATM UNI port on an RPM
- ATM UNI port on a BPX 8600 series BXM card

In addition to frame-to-cell and DLCI-to–VPI/VCI conversion, SIW maps cell loss priority and congestion data between the Frame Relay and ATM formats and is FRF.8-compliant. It provides full support for routed and bridged PDUs, transparent and translation modes, and VP translation.

Cell Loss Priority

In addition to frame-to-cell and DLCI-to–VPI/VCI conversion, the SIW feature maps cell loss priority (CLP) and congestion information from the Frame Relay format to the ATM format for an individual connection. You can also modify the CLP and congestion indicators for a connection. On the CLI, use **cnfchanmap** for these tasks. In the Frame Relay-to-ATM direction, you can specify the discard eligibility (DE)–to–cell loss priority (CLP) mapping for an SIW connection:

- The DE bit in a frame maps to the CLP bit of every ATM cell resulting from segmentation.
- CLP is always 0.
- CLP is always 1.

In the ATM-to–Frame Relay direction, you can specify a CLP-to-DE mapping scheme for an individual connection:

- If one or more ATM cells belonging to a frame has a CLP=1, the DE field of the Frame Relay frame is set.

- DE is always 0.
- DE is always 1.

Congestion Indication

This section describes congestion indictors. You can modify the CLP and congestion indicators for a connection. On the CLI, use the **cnfchanmap** command. In the Frame Relay–to-ATM direction for an individual SIW connection, you can configure the mapping for Forward Explicit Congestion Notification (FECN)–to–Explicit Forward Congestion Indicator (EFCI) schemes:

- FECN bit in the Frame Relay frame is mapped to the EFCI bit of every ATM cell generated by the segmentation process of the frame.
- EFCI is always 0.
- EFCI is always 1.

In the ATM-to–Frame Relay direction, service interworking connections use the following EFCI to FECN/BECN mapping schemes:

- If the EFCI bit in the last ATM cell of a segmented frame received is set to 1, the FECN of the Frame Relay frame is set to 1.
- BECN is always set to 0.

Command and Response Mapping

The FRSM provides command and response mapping in both directions:

- In the Frame Relayto-ATM direction, the FRSM maps the C/R bit of the received Frame Relay frame to the CPCS-UU least-significant bit of the AAL5 CPCS PDU.
- In the ATM-to–Frame Relay direction, the FRSM maps the least-significant bit of the CPCS-UU to the C/R bit of the Frame Relay frame.

Translation and Transparent Modes

Each service interworking (SIW) connection can exist in either *translation* or *transparent* mode. In translation mode, the FRSM translates protocols between the FR NLPID encapsulation (RFC 1490) and the ATM LCC encapsulation (RFC 1483).

In transparent mode, the FRSM does not translate. Translation mode support includes address resolution by transforming address resolution protocol (ARP, RFC 826) and inverse ARP (inARP, RFC 1293) between the Frame Relay and ATM formats.

Frame Forwarding

You can configure an individual port for frame forwarding. Frame forwarding is the same as standard Frame Relay except that the FRSM:

- Does not interpret the 2-byte Q.922 header.
- Maps all received frames to a specific connection if it exists, otherwise it discards the frames.
- Does not map between DE and CLP or between FECN and EFI.

- Does not support statistics for “Illegal header count” or “Invalid DLCI.”
- Does generate statistics for “Discarded frame count due to no connection.”

ATM/Frame-to-User Network Interface

All FRSMs support the ATM Frame User-to-Network Interface (FUNI). When a frame arrives from the FUNI interface, the FRSM removes the 2-byte FUNI header and segments the frame into ATM cells by using AAL5. In the reverse direction, the FRSM assembles ATM cells from the network into a frame by using AAL5, adds a FUNI header to the frame, and sends it to the FUNI port.

Loss Priority Indication

The FRSM maps the loss priority indication for both directions:

- In the FUNI-to-ATM direction, the FRSM maps the CLP bit in the FUNI header to the CLP bit of every ATM cell that it generates for the FUNI frame.
- In the ATM-to-FUNI direction, the FRSM always sets the CLP bit in the FUNI header to 0.

Congestion Indication

The FRSM maps congestion indication in both directions:

- In the FUNI-to-ATM direction, it sets EFCI to 0 for every ATM cell it generates by segmentation.
- In the ATM-to-FUNI direction, it sets the CN bit in the FUNI header to 1 if the EFCI field in the last ATM cell of a received, segmented frame is 1. The two reserve bits (the same positions as C/R and BECN in Frame Relay header) are always 0.

Configuring Frame Relay Service

This section first describes how to configure the FRSM card, lines, and ports, then describes how to add connections. The descriptions are for the CLI execution of the tasks. You can also configure the FRSM card, lines, and ports by using the CiscoView application. Refer to the CiscoView documentation for the directions. Also, the easiest way to add connections is by using the Cisco WAN Manager application. For full details of how to set up a connection through the WAN Manager GUI, refer to the *Cisco WAN Manager Operations* manual.

Configuring the FRSM Cards, Lines, and Ports

This section describes how to configure card-level parameters—including Y-cable redundancy where applicable, physical lines, and logical ports on the FRSM-series cards.

Step 1 If necessary, modify the resource partitioning for the whole card by executing the **cnfcdrscprtn** command. You can view resource partitioning through **dspcdrscprtn**.

cnfcdrscprtn <*number_PAR_conns* | *number_PNNI_conns* | *number_TAG_conns*>

number_PAR_conns is the number of connections in the range 0–1000 available to the PAR controller.

number_PNNI_conns is the number of connections in the range 0–1000 available to a PNNI controller.

number_TAG_conns is the number of connections in the range 0–1000 available to the Tag controller.

For example, you could reserve 300 connections for each controller on the FRSM with:

cnfcdrscprtn 300 300 300

Step 2 If the physical line is not yet active, use the **addln** command to activate it. The only argument **addln** takes is the line number.

Step 3 If necessary, modify a line on the MGX-FRSM-2CT3, MGX-FRSM-HS2, MGX-FRSM-HD1/B, AX-FRSM-8T1 or AX-FRSM-8E1 by using **cnfln**.

To change the line parameters on an MGX-FRSM-2CT3 or MGX-FRSM-2T3E3, use **cnfds3ln**. Note that both **cnfln** and **cnfds3ln** apply to the MGX-FRSM-2CT3 but apply to different features. Refer to the *Cisco MGX 8800 Series Command Reference* for the syntax of the line modification commands on all cards except the MGX-FRSM-HS1/B.

The syntax for **cnfln** on the MGX-FRSM-HS1/B is:

cnfln <*line_num*> <*line_type*> <*line_rate*>

- *line_num* has the range 1–4.
- *line_type* is a number that specifies the mode and must match the 12IN1 cable connected to the port: 1=DTE; 2=DCE; 3=DTE_ST (V.35 only).

Note If no cable is attached, the system lets you specify any line type, but the Alarm LED on the front card turns from yellow to red.

- *line_rate* is a number in the range 1–50. The number corresponds to the bits per second for the line. (The range of line rates is 48 Kbps–52 Mbps.) See Table 6-2.

Table 6-2 Supported Lines Rates on the MGX-FRSM-HS1/B

1–50 Correspond to Line Rates in Kbps.				
1=48000	2=56000	3=64000	4=112000	5=128000
6=168000	7=192000	8=224000	9=256000	10=280000
11=320000	12=336000	13=384000	14=392000	15=448000
16=512000	17=768000	18=1024000	19=1536000	20=1544000
21=1792000	22=1920000	23=1984000	24=2048000	25=3097000
26=3157000	27=4096000	28=4645000	29=4736000	30=6195000
31=6315000	32=7744000	33=7899000	34=8192000	35=9289000
36=9472000	37=10240000	38=10890000	39=11059000	40=12390000
41=12629000	42=13897000	43=14222000	44=14336000	45=15488000
46=15799000	47=16384000	48=20025000	49=2498600	50=52000000

The possible errors for **cnfln** are:

- One or more parameters are invalid.
- Line does not exist (has not been added).

- Loopback or BERT is on.
- An active port already exists on this line.

Step 4 If the logical port does not exist or is not the appropriate type (Frame Relay, FUNI, or frame forwarding), execute **addport** to create the appropriate type of port. If the logical port already exists and needs no modification (**cnfport**), you can add connections by performing the tasks in "Adding a Frame Relay Connection." The parameters for **addport** depend on the type of FRSM:

For MGX-FRSM-2T3E3, or MGX-FRSM-HS2:

addport <*port_num*> <*line_num*> <*port_type*>

- *port_num* is the logical port number in the range 1–2. The mapping between a logical port and a line is one-to-one for these cards. Note that the maximum committed information rate (CIR) on each line for these cards is 1–44210000 bps for MGX-FRSM-2T3, 1-34010000 bps for MGX-FRSM-2E3, and 1–51840000 bps for MGX-FRSM-HS2. Specify CIR with **addcon** (or **addchan** if necessary).
- *line_num* is the physical line number in the range 1–2.
- *port_type* is a number representing the mode of operation for the logical port: 1 for Frame Relay; 2 for FUNI mode-1a; or 3 for frame forwarding.

For an MGX-FRSM-2CT3:

addport <*port_num*> <*line_num*> <*ds0_speed*> <*begin_slot*> <*num_slot*> <*port_type*>

- *port_num* is the logical port number in the range 1–256. When you subsequently add a connection through the preferred command **addcon** or the **addchan** command (which requires NSAP format), you must indicate a logical port by using this singular *port_num* regardless of the number of DS0s. (You can add 1–24 DS0s to a single *port_num* through the other **addport** parameters.)
- *line_num* is the DS1 number in the range 1–56 to which you assign the DS0 when both lines are active. If you activate only one line, the range is 1–28. You can assign up to 24 contiguous DS0s to one DS1. Each physical line supports up to 28 DS1s. The number of DS0s cannot span more than DS1.
- *ds0_speed* is a number representing the DS0 speed: 1 for 56 Kbps or 2 for 64 Kbps.
- *begin_slot* is the beginning DS0 timeslot in 1 base. For example, on port number 50, you could specify *begin_slot* to be 9 then specify *num_slot* to be in the range 1–16.
- *num_slot* is the number of DS0s in the associated DS1. Note that the number of DS0s cannot be such that the logical port spans more than DS1.
- *port_type* is a number representing the mode of operation for the logical port: 1 for Frame Relay; 2 for FUNI mode-1a; and 3 for frame forwarding.

For MGX-FRSM-HS1/B

addport <*port_num*> <*port_type*>

- *port_num* is the port number in the range 1–4.
- *port_type* is a number representing the type of frame interface technology for the logical port: 1 for Frame Relay; 2 for FUNI mode-1a; or 3 for frame forwarding.

For AX-FRSM-8T1 and AX-FRSM-8E1:

addport <*port_num*> <*line_num*> <*ds0_speed*> <*begin_slot*> <*num_slot*> <*port_type*>

- *port_num* is the logical port number in the range of either 1–192 for T1 or 1–248 for E1. When you subsequently add a connection through the preferred command **addcon** or the **addchan** command (which requires NSAP format), you must indicate a logical port by using this singular *port_num* regardless of the number of DS0s. (You can add 1–24 DS0s to a single line through the other **addport** parameters.)
- *line_num* is the physical line number in the range 1–8.
- *ds0_speed* is a number representing the DS0 speed: 1 for 56 Kbps or 2 for 64 Kbps.
- *begin_slot* is the beginning DS0 timeslot in 1 base. For example, on port number 50, you could specify *begin_slot* to be 9 then specify *num_slot* to be in the range 1–16.
- *num_slot* is the consecutive DS0s that each connection on *port_num* has.
- *port_type* is a number representing the mode of operation for the logical port: 1 for Frame Relay; 2 for FUNI mode-1a; and 3 for frame forwarding.

Step 5 Modify as needed the signaling on a port by executing cnfport.

cnfport <*port_num*> <*lmi_sig*> <*asyn*> <*elmi*> <*T391*> <*T392*> <*N391*> <*N392*> <*N393*>

- *port_num* is the logical port number with a range that depends on the type of FRSM:
  - For the MGX-FRSM-2CT3, 1–56
  - For a channelized AX-FRSM-8T1, 1–192
  - For a channelized AX-FRSM-8E1, 1–248
  - For the unchannelized cards, the range equals the number of lines.
- *lmi_sig* specifies the LMI signaling. 1=Other; 2=None; 3=StrataLMI; 4=AnnexAUNI; 5=AnnexDUN; 6=AnnexANNI; 7=AnnexDNNI LMI signalling; N=none; S=StrataLMI; and au=AnnexAUNI.
- *asyn* enables asynchronous updates: (y)es or (n)o
- *elmi* enables Enhanced LMI: (N or n) disable (Y or y) enable
- *T391* sets the T391 timer. The range is 5–30 seconds. It sets the interval in seconds for NNI status polling. The default is 10.
- *T392* sets the T392 timer. The range is 5–30 seconds. It sets the interval in seconds for UNI status polling. The default is 15.
- *N391* sets the N391 counter–the number of UNI/NNI polling cycles. The range is 1–255. The default is 6.
- *N392* sets the N392 counter–the threshold for UNI/NNI *errors*. The range is 1–10. The default is 3.
- *N393* sets the N393 counter–the UNI/NNI threshold for *monitored events*. The range is 1–10 and must be greater than the value of *N392*. The default is 4.

Step 6 Configure resources for the port as needed by executing **cnfportrscprtn**. To see the partitioning, use **dspportrscprtn**. The description has a high- and low-bandwidth version:

cnfportrscprtn <*port_num*> <*controller*> <*percent BW*> <*low DLCI*> <*high DLCI*> <*max LCN*>

For FRSM-VHS and the MGX-FRSM-HS1/B cards:

- *port_num* is the port number in the range 1–2 for MGX-FRSM-2T3E3 and MGX-FRSM-HS2, 1–4 for MGX-FRSM-HS1/B, or 1–256 for MGX-FRSM-2CT3.
- *controller* is a number representing the controller: 1=PAR; 2=PNNI; and 3=TAG.

- *percent BW* is the percentage of the bandwidth in the range 0–100 and applies to both egress and ingress.
- *low DLCI* is in the range 0–1023.
- *high DLCI* is in the range 0–1023.
- *max LCN* is the maximum number of logical connections available to the controller on this port. The ranges are 1–4000 for MGX-FRSM-2CT3, and 1–2000 for MGX-FRSM-2T3E3 and MGX-FRSM-HS2.

For AX-FRSM-8T1 or AX-FRSM-8E1:

- *port_num* is the logical port number in the range 1–192 for T1 or 1–248 for E1.
- *controller-name* is PAR, PNNI, or TAG.
- *percent BW* is the percentage of the bandwidth in the range 0–100 and applies to both egress and ingress.
- *low DLCI* is in the range 0–1023.
- *high DLCI* is in the range 0–1023.
- *max LCN* is the maximum number of logical connections available to the controller on this port. The range is 1–1000.

Note The following step applies to Y-cable redundancy for the MGX-FRSM-2T3E3. For 1:N redundancy on the 8-port FRSMs, refer to "Redundancy Support by the MGX-SRM-3T3/B."

Step 7 Optionally configure Y-cable redundancy if you have connected the lines of adjacent MGX-FRSM-2T3E3 cards through a Y-cable. The applicable commands are **addred**, **dspred**, and **delred**. These commands run on the PXM1 rather than the service module, so you must change to the PXM1 CLI to execute them:

addred <*redPrimarySlotNum*> <*redSecondarySlotNum*> <*redType*>

- *redPrimarySlotNum* is the slot number of the primary card. The possible numbers are 1–6, 9–14, 17–22, and 25–30.
- *redSecondarySlotNum* is the slot number of the primary card. The possible numbers are 1–6, 9–14, 17–22, and 25–30.
- *redType* is the type of redundancy. Enter a 1 for 1:1 Y-cable redundancy.

Use the display commands **dspcd**, **dspln**, and so on to check the configuration and status.

Adding a Frame Relay Connection

This section describes how to add a Frame Relay connection according to the rules for adding a standard connection or a management connection in the form of either a DAX con or a three-segment connection. See "Rules for Adding Connections" earlier in this chapter.

Step 1 Add a connection by using **addcon**. If the application requires the NSAP form for the end-point, use **addchan** as described in the command reference.

The system automatically assigns the next available *channel number*, so the **addcon** command does not require it. However, some related commands require a channel number. To see the channel number after you add a connection, use **dspcons**.

On the FRSM-VHS cards (2CT3, 2T3E3, or HS2):

addcon <*port*> <*DLCI*> <*cir*> <*chan_type*> <*egress_service_type*> [*CAC*] <*controller_type*> <*mastership*> [*connID*] <*controllerID*>

- *port* is the logical port number on the MGX-FRSM-2CT3 in the range 1–256. On the MGX-FRSM-2T3E3 and MGX-FRSM-HS2, the range is 1–2. (See **addport** step if necessary.)
- *DLCI* is the DLCI number in the range 0–1023 (2CT3/2T3/2E3/HS2).
- *cir* is the committed information rate in one of the following ranges: for 2CT3, 1–1536000 bps; for 2T3, 1–44210000 bps; 2E3, 1–34010000 bps; and for HS2, 1–51840000 bps.
- *chan_type* specifies the type of connection: 1=NIW, 2=SIW-transparent mode; 3=SIW with translation; 4=FUNI; and 5=frame forwarding.
- *egress_service_type* is a number that specifies the type of queue on the egress: 1=high priority; 2=real-time VBR; 3=nonreal-time VBR; 4=ABR; and 5=UBR.
- *CAC* optionally enables connection admission control: 1=enable; 2=disable (default). With CAC enabled, the system adds the resource consumption represented by adding the connection to the total resources consumed on a logical port.
- *controller_type* is the controller type for signalling connections: 1 (the default) specifies a PVC and applies to PAR. 2 specifies a SPVC and applies to PNNI.
- *mastership* indicates if this end of the connection is master or slave: 1=master; 2=slave.
- *connID* is the connection identifier at the remote end. It appears in the syntax as an optional parameter because it is mandatory only when you add the connection at the master end. See "Rules for Adding Connections" at the beginning of this chapter. A *connID* can have one the following formats according to the slave end-point:

  Switchname.SlotNo.PortNo.DLCI

  Switchname.SlotNo.PortNo.ControllerId.DLCI

  Switchname.SlotNo.PortNo.VPI.VCI for ATM end-point
- *controllerID* is a number indicating the type of network control application: 1=PAR, 2=PNNI, 3=MPLS

For AX-FRSM-8T1 and AX-FRSM-8E1:

addcon <*port*> <*DLCI*> <*cir*> <*chan_type*> [*CAC*] <*controller_type*> <*mastership*> <*connID*> <*controllerID*>

- *port* is the logical port number in the range 1–192 for T1 or 1–248 for E1. (See **addport** step if necessary.)
- *DLCI* is the DLCI number in the range 0–1023.
- *cir* is the committed information rate in one of the following ranges: for T1, 0–1536000 bps; for E1, 0–2048000 bps.
- *chan_type* specifies the type of connection: 1=NIW; 2=SIW-transparent mode; 3=SIW with translation; 4=FUNI; and 5=frame forwarding.
- *CAC* optionally enables connection admission control: 1=enable; 2=disable (default).
- *controller_type* is the controller type for signaling: 1=PVC (PAR), the default; 2=SPVC (PNNI).

- *mastership* indicates if this end of the connection is master or slave: 1=master,;2=slave.
- *connID* is the connection identifier at the remote end and can have one the following formats according to the type of card at the slave end-point:

  SwitchName.SlotNo.PortNo.DLCI

  SwitchName.SlotNo.PortNo.ControllerId.DLCI

  SwitchName.SlotNo.PortNo.VPI.VCI for ATM end-point

  If the remote end is a PXM1, the port number can be in the range 1–32 for user connections or 34 for inband management connections (stand-alone switch only).
- *controllerID* is a number indicating the type of network control application: 1=PAR; 2=PNN;, 3=TAG.

For MGX-FRSM-HS1/B:

addcon <*port_number*> <*DLCI*> <*CIR*> <*chan_type*> <*CAC*> <*Controller_type*> <*mastership*> <*connID*>

- *port_number* is the logical port in the range 1–4.
- *DLCI* is the DLCI in the range 0–1023.
- *CIR* specifies the committed information rate. The range is 1–10000000 bps (although the V.35 version supports a maximum of 8 Mbps sustained).
- *chan_type* is a number that identifies the channel type: 1=NIW; 2=transparent SIW; 3=SIW with translation; 4=FUNI; 5=frame forwarding.
- *CAC* enables connection admission control.
- *Controller_type* identifies the network control application. The only valid type is the default of 1 (PAR).
- specifies the mastership status of this end of the connection: 1=master; 2=slave.
- *mastership* indicates the mastership status for this end of the connection: 1=master; 2=slave.
- *connID* is the "remote" connection identifier from the slave end if you need to enter it at the master end. See "Rules for Adding Connections" for an explanation. The possible formats are:
  - *SwitchName.SlotNo.PortNo.DlCI*
  - *SwitchName.SlotNo.PortNo.ControllerId.DlCI* for Frame Relay end point
  - *SwitchName.SlotNo.PortNo.VPI.VCI* for ATM end-point.

  Where *ControllerId* can be 1 (PAR), 2 (PNNI), or 3 (TAG).

Step 2 Modify a connection as needed by executing **cnfcon**. See the command line Help or the command reference for the parameters for individual card types.

Step 3 If necessary, modify the CLP and congestion indicator fields by using **cnfchanmap**. Use **dspchanmap** to check this configuration for a connection.

cnfchanmap <*chan_num*> <*chanType*> <*FECN/EFCI*> <*DE to CLP*> <*CLP to DE*>

chan_num is the channel (connection) number. The ranges are:

2CT3, 16–4015
2T3, 2E3, HS2, 16–2015
HS1, 16–215
T1, E1, 16–1015

chanType is a number in the range 1–5 indicating the service type for the connection.

1=NIW
2=SIW in transparent mode
3=SIW in translation mode
4=FUNI
5=frame forwarding

FECN/EFCI is a number in the range 1–2 that specifies the mapping between FECN and EFCI fields.

1=map EFCI (SIW only)
2=set EFCI to 0

DE to CLP is a number in the range 1–3 that specifies the DE-to-CLP mapping.

1=map DE to CLP
2=set CLP to 0
3=set CLP to 1

CLP to DE is a number in the range 1–4 that specifies the CLP-to-DE mapping.

1=map CLP to DE
2=set DE to 0
3=set DE to 1
4=ignore CLP (NIW only)

Step 4 To check statistics for a connection, use **dspchstats** as needed.

Establishing the BPX 8600 to BPX 8600 Series Segment

For a three-segment connection, establish a BPX 8600 to BPX 8600 series (middle) segment. Execute **addcon** at *one* of the BPX 8600 series switchEs, as follows:

- For slot and port number, specify slot and port of the BXM connected to MGX 8250 switch.
- For VPI and VCI, specify the VPI and VCI at the end-point on the PXM1.
- For Switchname, use the name of the BPX 8600-series switch at the far end of the connection.

- For Remote Channel, specify the slot and port number of the BXM port attached to the MGX 8250 switch at the far end. Specify the VPI as the slot number of the remote MGX 8250 FRSM connected to the BPX 8600 series switch, and specify VCI as the LCN of the Frame Relay connection at the remote MGX 8250 switch.
- Specify the type of connection. Enter ATFST if the ForeSight feature is operating and ATFR if this feature is not operating.

Specify the other **addcon** bandwidth parameters such as MCR, PCR, %Util, and so on.

- Minimum Cell Rate (MCR) is only used with the ForeSight feature (ATFST connections).
- MCR and Peak Cell Rated (PCR) should be specified according to the following formulae.
  - MCR = CIR * 3/800 cells per second.
  - PCR = AR * 3/800 cells per second but less than or equal to 6000. AR=Frame Relay port speed in bps.

For example: AR equals 64K, PCR=237, or
AR speed equals 256K, PCR=950, or
AR speed equals 1536K, PCR=5703

The preceding MCR and PCR formulae are predicated on a relatively small frame size of 100 octets, and even smaller frame sizes can result in worst-case scenarios. For example:

For a frame size of 64 octects the PCR formula becomes:	PCR = AR * 2/512 cells per sec
For a frame size of 43 octects the PCR formula becomes:	PCR = AR * 2/344 cells per sec

% Util should be set to the same value as that used for the Frame Relay segments of the connection.

Test Commands for the FRSMs

To check the state of cards, lines, ports, queues, and connections, use the display commands (**dsp**...) and **addchanloop**. The following commands are available for testing the FRSMs (see the *Cisco MGX 8800 Series Command Reference* for descriptions):

- **addlnloop**, **cnflnloop**, and **dellnloop** are line-level, diagnostic commands that require the *service level* user privilege.
- **addchanloop** and **delchanloop** are standard user commands for looping on a channel.
- **tstcon** checks the integrity of a connection.
- **tstdelay** measures the round-trip delay on a connection.
- **cnfoamlpbk** enables/disables the OAM loopback tests. Use the **dspoamlpbk** command to review the status of the test.
- **cnftrafficgen** enables/disables traffic generation tests on a per LCN-Basis. Use the **dsptrafficgen** command to display the traffic generation test results.

Support for Alarm Reporting

The FRSM cards support card- and line-level alarm reporting. Use the CiscoView application or the CLI to view current alarms. The CLI commands are **dspalmcnt**, **dspalm**, and **dspalms**. These commands require a *switch*, either "-x21 or "-hs1" whichever is valid, to identify the interface type. See the *MGX 8800 Series Command Reference* for syntax and alarm descriptions.

Bit Error Rate Testing on an Unchannelized T3 or E3 FRSM

The MGX 8250 switch can perform a bit error rate test (BERT) on one active line at a time on the MGX-FRSM-2T3E3. This type of testing disrupts service because it requires the tested path to be in loopback mode. You can configure a BERT session and perform related tasks through the CiscoView application or the CLI.

The MGX 8250 bus structure supports one BERT session per upper or lower bay of the card cage, so the switch can run a maximum of two sessions at once. When you specify the target slot through the CiscoView application or the **acqdsx3bert** command on the CLI, the system determines if a BERT configuration already exists in the bay that has the specified slot. If no BERT configuration exists in the bay, the display presents a menu for the BERT parameters.

The CLI commands (whose functions correspond to CiscoView selections) are:

- **acqdsx3bert** to determine if other BERT sessions exist in the bay
- **cnfdsx3bert** to specify a pattern for the BERT test
- **startdsx3bert** to start a BERT test (after resetting BERT counters)
- **moddsx3bert** to inject multi-rate errors into the BERT bit stream
- **dspdsx3bert** to display the parameters and results of the current test
- **deldsx3bert** to end the current test (and retain the values in the BERT counters)

Refer to the *Cisco MGX 8250 Wide Area Edge Switch Command Reference* for command details.

Note When a BERT session begins, all the connections on the line go into alarm and return to normal when you end the test. Consequently, the test may result in a large number of traps and other types of traffic (such as AIS).

Circuit Emulation Service Module for T3 and E3

The main function of the Circuit Emulation Service Module (CESM) is to provide a constant bit rate (CBR) service. The CESM converts data streams into CBR AAL1 cells according to the CES-IS specifications of the ATM Forum for *unstructured* transport across an ATM network. Unstructured transport means the CESM does not interpret or modify framing bits, so a high-speed CESM creates a single data pipe The most common application is legacy support for digitized voice from a PBX or video from a codec. Using circuit emulation, a company can expand its data communication network without specific voice or video cards to meet its voice or teleconferencing requirements.

The higher speed CESM uses a T3 or E3 line. The card set consists of an MGX-CESM-T3 or MGX-CESM-E3 front card and either a BNC-2T3 or BNC-2E3 back card. In this CESM application, only one line on the two-port back card is operational. Furthermore, it supports one logical port and one

logical connection (as a data pipe) on the line and runs at the full T3 or E3 rate. Although the typical connection setup is the three-segment connection across an ATM network, the CESM can support a DAX connection. Up to 26 CESM card sets can operate in an MGX 8250 switch.

Features

The MGX-CESM-T3 or MGX-CESM-E3 provide the following:

- Unstructured data transfer at 44.736 Mbps (1189980 cells per second) for T3 or 34.368 Mbps (91405 cells per second) for E3
- Synchronous timing by either a local clock sourced on the PXM1 or loop timing (transmit clock derived from receive clock on the line)
- 1:1 redundancy is through a Y-cable
- Programmable egress buffer size (in the form of cell delay variation)
- Programmable cell delay variation tolerance (CDVT)
- Per VC queuing for the transmit and receive directions
- An idle code suppression option
- Bit count integrity when a lost AAL1 cell condition arises
- Alarm state definitions per G.704
- Trunk conditioning by way of framed AIS for T3 and unframed, alternating 1s and 0s for E3
- On-board bit error rate testing (BERT)

Cell Delay Treatment

You can configure a tolerable variation in the cell arrival time (CDVT) for the receive buffer. After an underrun, the receiver places the contents of the first cell to arrive in a receive buffer then plays it out at least one CDVT value later. The maximum cell delay and CDVT (or jitter) are:

- For T3
  - Cell delay of 4 msec
  - CDVT of 1.5 msec in increments of 125 microseconds
- For E3
  - Cell delay of 2.9 msec
  - CDVT of 2 msec in increments of 125 microseconds

Error and Alarm Response

When it detects a loss of signal (LOS) alarm, the CESM notifies the connected CPE in the upstream direction after an integration period. The CESM continues to emit cells at the nominal rate but sets the ATM cell payload with an appropriate data pattern as specified by the ATM Forum CES V2.0 specification. Also, an OAM cell with RDI code goes to the far end to indicate out-of-service. The significance of the different types of alarms appears in Table 6-3.

Table 6-3 CESM Errors and Alarms

Error	Alarm Type	Down stream	Up Stream	Comments
Link Failure (RX)	Blue (LOS)	AIS—OAM cells	none	Data cells According to ATM-Forum CES-IS V 2.0
Receive RAI	Yellow	None	None	
Receive LOF		n/a	n/a	Not applicable
Receive AIS	Blue (AIS)	AIS (link)	FERF OAM cells	AIS—done over the T3/E3 link by sending the AIS data over the T3/E3 link

Configuring Service on a T3 or E3 CESM

This section first describes the steps for configuring the card, line, and port-level parameters for an MGX-CESM-T3 and MGX-CESM-E. It then describes how to add a connection. If necessary, refer to the section titled "Tasks for Configuring Cards and Services" for background information on these types of tasks. Use either the CLI or the CiscoView application to set up the card and line parameters. Use either the CLI or the Cisco WAN Manager application to add connections. The fundamental tasks and applicable CLI commands appear in the following list. For a complete list of CLI commands that apply to the CESM cards, use the **Help** command on the CLI of the card or refer to the tables at the front of the *Cisco MGX 8000 Series Command Reference.*

- Optionally configure Y-cable redundancy at the card level (**addred** on the CLI).
- Optionally modify resource partitioning at the card level (**cnfcdrscprtn**)
- Activate a physical line (**addln** on the CLI) and optionally configure the line (**cnfln**) for line coding, line length, and clock source
- Activate the functioning of the logical port on a physical line (**addport**)
- Optionally modify resource partitioning at the port level (**cnfportrscprtn**)
- Add the connections by using **addcon** (or **addchan** if NSAP addressing is necessary)
- Configure the connection for CDVT, cell loss integration period, and egress buffer size by using **cnfcon** (or **cnfchan** if NSAP addressing is necessary)

Configuring the Card, Lines, and Ports

This section describes how to configure parameters for the card, line, and port through the CLI. If you use the CiscoView application, refer to CiscoView documentation. The command sequence is:

Step 1 **addln** <*line number*>

where *line number* is 1. You can modify line characteristics with **cnfln**.

Step 2 Optionally execute **cnfln** to modify line characteristics:

cnfln <*line_num*> <*line_code*> <*line_len*> <*clk_src*>

- *line_num* is 1
- *line_code* is a number to specify line coding: 1 for B3ZS (T3); and 2 for HDB3 (E3)

- *line_len* is a number that specifies the line length: 1 for up to 225 feet; 2 for more than 225 feet
- *clk_src* is a number that specifies the clock source: 1 for local clock sourced on the PXM1; 2 for looped clock

Step 3 Use **dspln** or **dsplns** to check the line. For **dspln**, the valid line number is 1.

Step 4 Create a logical port with **addport**:

addport <*port_num*> <*line_num*>

- *port_num* is the logical port number and is always 1
- *line_num* is the number of the physical line and is always 1

Step 5 Configure resources at the port level as needed by executing **cnfportrscprtn**:

cnfportrscprtn <*port_num*> <*controller_name*>

- *port_num* is the logical port number and is always 1
- *controller_name* is the name of the network control application. Enter one of the following strings: PAR, PNNI, or MPLS

Step 6 Optionally configure Y-cable redundancy if you have connected the lines of adjacent CESMs through a Y-cable. The applicable commands are **addred**, **dspred**, and **delred**. These commands run on the PXM1 rather than the service module, so you must change to the PXM1 CLI to execute them:

addred <*redPrimarySlotNum*> <*redSecondarySlotNum*> <*redType*>

- *redPrimarySlotNum* is the slot number of the primary card. The possible numbers are 1–6, 9–14, 17–22, and 25–30.
- *redSecondarySlotNum* is the slot number of the primary card. The possible numbers are 1–6, 9–14, 17–22, and 25–30.
- *redType* is the type of redundancy. Enter a 1 for 1:1 Y-cable redundancy.

Adding and Modifying Connections

Use either the Cisco WAN Manager application or the CLI to add or modify connections. If you use the WAN Manager application, refer to the *Cisco WAN Manager Operations Guide*.

This section describes how to add a connection to a PXM1 in a stand-alone switch according to the rules for a standard connection or a management connection in the form of either a three-segment connection or a DAX con. See “Rules for Adding Connections” earlier in this chapter. The preferred command is **addcon**. If the application requires NSAP addressing, use **addchan** to add the connection and **cnfchan** if you need to modify it. Refer to the command reference for the syntax.
On the CESM CLI:

Step 1 Add a connection by executing **addcon**. (Alternatively, you can use **addchan** if your application requires the NSAP format of end-point specification.) Execute **addcon** at both ends of the connection—unless the remote end-point is on port 34 of a PXM1 (see the note at the end of this step).

The syntax for **addcon** is:

addcon <*port_num*> [*mastership* [*remoteConnId*]]

- *port_num* is the logical port number and is always 1.
- *mastership* indicates whether this end-point is the master or slave 1=master; 2=slave (default).

- *remoteConnId* is the identification for the connection at the slave end. The format is *switchname.slot_number.port_number.vpi.vci*. For the MGX-CESM-T3 and MGX-CESM-E3, the VPI and VCI are typically 0 or 1.

Note For the *channel number*, the system always returns the number 32 for the high-speed CESM. If you execute **dspchan**, use channel number 32 to see details about the channel (or **dspchans**—and no arguments—to see high-level details about the channel). In contrast, the **dspcon** command takes the *port number* 1 to identify the connection even though it shows the same information as **dspchan**.

Step 2 Optionally, you can use **cnfcon** to modify the connection.

cnfcon <*port_num*> <*CDVT*> <*CellLossIntegPeriod*> <*bufsize*>

- *port_num* is the port number and is always 1.
- *CDVT* is a tolerable variation for the arrival time of cells. For T3, the range is 125–1447 microseconds in 125-microsecond increments. For E3, the range is 125–1884 microseconds in 125-microsecond increments.
- *CellLossIntegrPeriod* is the amount of time a connection can be in an error condition before an alarm is declared. The range is 1000–65535 milliseconds.
- *bufsize* is the egress buffer size in bytes. You can let the CESM compute the size by entering 0 for *bufsize* or enter the number of bytes up to a maximum of 16224.

Step 3 Optionally, you can use **cnfswparms** on a BPX 8600 series switch to configure connection parameters for the network segment of a three-segment connection. For a stand-alone application, use whatever means are supported by the backbone switches.

cnfswparms <*chan_num*> <*mastership*> <*vpcflag*> <*conn_service_type*> (=cos) <*route_priority*> <*max_cost*> <*restrict_trunk_type*> <*pcr*> <*mcr*> <*pct_util*>

- *chan_number* is the channel (connection) number and is always 32.
- *mastership* specifies the current end-point as master or slave: 1=master; 2=slave (default).
- *vpcflag* indicates whether the connection is a VPC or a VCC: 1=VPC; and 2=VCC.
- *conn_service_type* selects the type of service for the connection: 1=cbr; 2=vbr; 3 is not used; 4=ubr; 5=atfr; 6=abrstd; and 7=abrfst.
- *route_priority* is the priority of the connection for rerouting. The range is 1–15 and is meaningful only in relation to the priority of other connections.
- *max_cost* is a number establishing the maximum cost of the connection route. The range is 1–255 and is meaningful only in relation to the cost of other connections.
- *restrict_trunk_type* is a number that specifies the type of trunk this connection can traverse. The numbers are 1 for no restriction, 2 for terrestrial trunk only, and 3 for satellite trunk only.
- *pcr* is the peak cell rate in cells per second (cps). For T3, the maximum is 118980 cps. For E3, the maximum is 91405 cps.
- *mcr* is the minimum cell rate. The range is 1–65535 cells per second.
- *pct_util* is the percent utilization in the range 1–100.

Bit Error Rate Testing on a T3 or E3 CESM

An active MGX-CESM-T3 or MGX-CESM-E3 can perform a bit error rate test (BERT). Each of these cards contains its own BERT controller, so BERT sessions can run on any number of these cards in the system. However, only one user at a time can run BERT on a card. BERT disrupts service because it requires the tested path to be in loopback mode.

The CLI commands (whose functions correspond to CiscoView selections) appear in the following list. The correct order of task execution is crucial for obtaining valid results. With the exception of **dspdsx3bert**, you must execute the commands in the order they appear in the following list. You can execute **dspdsx3bert** before, during, or after a session. Because the order of execution is crucial, read the command descriptions whether you use the CiscoView application or the CLI.

1. **acqdsx3bert** determines if another user currently is running a BERT session on the card.
2. **startdsx3bert** starts a BERT test (after resetting BERT counters).
3. **cnfdsx3bert** specifies a pattern for the BERT test.
4. **moddsx3bert** injects multi-rate errors into the BERT bit stream.
5. **deldsx3bert** ends the current test (and retains the values in the BERT counters). This command also resets the status of current users that **acqdsx3bert** detects.
6. **dspdsx3bert** displays the parameters and results of the current test. You can execute this command at any time.

See the *Cisco MGX 8000 Series Command Reference* for command details.

Note When a BERT session begins, all the connections on the line go into alarm and return to normal when you end the test. Consequently, the test may result in a large number of traps and other types of traffic (such as AIS).

Eight-Port Circuit Emulation Service Modules

The main function of the Circuit Emulation Service Module (CESM) is to provide a constant bit rate (CBR) circuit emulation service by converting data streams into CBR AAL1 cells for transport across an ATM network. The CESM supports the CES-IS specifications of the ATM Forum.

The 8-port CESM lets you configure individual physical ports for structured or unstructured data transfer. The card sets consist of an AX-CESM-8T1 or AX-CESM-8E1 front card and one of the following back cards:

- RJ48-8T1
- R-RJ48-8T1 for supporting 1:N redundancy through the optional MGX-SRM-3T3/B
- RJ48-8E1
- R-RJ48-8E1 for supporting 1:N redundancy through the optional MGX-SRM-3T3/B
- SMB-8E1

Structured Data Transfer

If you configure an individual port for structured data transfer, the 8-port CESM supports:

- Synchronous timing.
- Superframe or Extended Superframe for T1.
- *N* x 64 Kbps, fractional DS1/E1 service (contiguous time slots only). You can map an *N* x 64 Kbps channel to any VC.
- CAS robbed bit for T1 (ABCD for ESF and SF frames) and CAS for E1 (channel 16).
- CCS channel as a transparent data channel.
- A choice of partial-fill payload sizes.
- Idle detection and suppression for 64Kbps CAS connections.
- Loopback diagnostics on a line or a connection (**addlnloop**, **tstcon**, and **tstdelay** commands).
- Bit error rate test (BERT) functionality with loopback pattern generation and verification on individual lines or logical port. For a description of the BERT functions, see the section titled "Bit Error Rate Testing Through an MGX-SRM-3T3."

Unstructured Data Transfer

If you configure an individual port for unstructured data transfer, the 8-port CESM supports:

- Synchronous or asynchronous timing at T1 (1.544 Mbps) or E1 (2.048 Mbps) rates. For asynchronous timing, you can select its basis as either SRTS and adaptive clock recovery.
- The special port type *framingOnVcDisconnect*. This port type prevents a remote-end CPE from going to LOF by placing a line in remote loopback mode when the CESM determines that a connection deletion or suspension occurred at the network-side ATM interface.
- Ability to detect and display a yellow alarm for the ESF framing on a T1 line.
- Loopback diagnostics on a line or a connection (**addlnloop**, **tstcon**, and **tstdelay** commands).
- Bit error rate test (BERT) functionality with loopback pattern generation and verification on individual lines. For a description of BERT functions, see the section "Bit Error Rate Testing Through an MGX-SRM-3T3."

Cell Delay Treatment

For each connection, you can configure a tolerable variation in the cell arrival time (CDVT) according to the expected reliability of the route. The CDVT applies to the receive buffer. After an underrun, the receiver places the contents of the first cell to arrive in a receive buffer then plays it out at least one CDVT value later. For each VC, the maximum cell delay and CDVT (or jitter) are:

- For T1
  - Cell delay of 48 msec
  - CDVT of 24 msec in increments of 125 microseconds
- For E1
  - Cell delay of 64 msec
  - CDVT of 32 msec in increments of 125 microseconds

Redundancy Support for the Eight-Port CESM

The AX-CESM-8T1 and AX-CESM-8E1 can have 1:N redundancy support but with some variations between the T1 and E1 modes of operation. The type of redundancy and the type of back card are interdependent. See "Service Resource Module" for more details. In general:

- With an RJ48-8T1, an MGX-SRM-3T3 can provide 1:N redundancy through the distribution bus or the redundancy bus.
- With an RJ48-8E1, an MGX-SRM-3T3 can provide 1:N redundancy through the redundancy bus.

Back card requirements for the MGX-SRM-3T3 and service modules vary, as follows:

- If you are using the MGX-SRM-3T3 for *bulk distribution* of T1 channels, the CESMs do not use back cards, but each MGX-SRM-3T3/B must have an MGX-BNC-3T3-M back card. (Bulk distribution is not available for E1 operation.)
- If the MGX-SRM-3T3/B supports T1 or E1 1:N redundancy through the *redundancy bus* (no bulk distribution), the MGX-SRM-3T3/B does not require a back card, but the *N* CESM primary cards must have one redundant version of the back card.

Error and Alarm Response

When it detects a loss of signal (LOS) alarm, the CESM notifies the connected CPE in the upstream direction after an integration period. The CESM continues to emit cells but sets the ATM cell payload with an appropriate data pattern as specified by the ATM Forum CES V2.0 specification. Also, an OAM cell with RDI code goes to the far end to indicate out of service. See Table 6-4.

Table 6-4 CESM Errors and Alarms

Error	Alarm Type	Down stream	Up Stream	Comments
Link Failure (RX)	Blue (LOS)	AIS—OAM cells	none	Data cells According to ATM-Forum CES-IS V 2.0
Receive RAI	Yellow	None	None	
Receive LOF		n/a	n/a	
Receive AIS	Blue (AIS)	AIS (link)	FERF OAM cells	AIS over the T1 link or alternating 1s and 0s E1 link.

Configuring Service on an Eight-Port CESM

This section describes the steps for setting up a CESM and adding connections. The maximum number of connections is 248 on the MGX-CESM/B-8E1 and 192 on the MGX-CESM/B-T1. Use either the CLI or the Cisco WAN Manager application to set up a CESM and add connections. The following list shows the fundamental tasks and applicable CLI commands:

- Optionally configure redundancy at the card level (**addred** and possibly **addlink** on the PXM1)
- Optionally modify resource partitions at the card level (**cnfcdrscprtn**)
- Activate a physical line (**addln**) and optionally configure the line (**cnfln**)
- Create logical ports for structured data transport on a physical line (**addport**)

- Optionally modify resource partitions at the port level (**cnfportrscprtn**)
- Add connections by using **addcon** (or **addchan** if NSAP addressing is necessary)

For CESM-related commands, see the list of service module commands at the beginning of the *Cisco MGX 8000 Series Command Reference*. Also, each command description in the command reference lists related commands. For example, it shows display commands that relate to addition commands.

Configuring the Card, Lines, and Ports

This section describes how to configure parameters for the card, lines, and ports through the CLI. If you use the CiscoView application, refer to the CiscoView documentation. On the CLI, the command sequence is:

Step 1 **addln** <*line number*>

where *line number* is in the range 1–8. You can modify line characteristics with **cnfln**.

Step 2 Optionally execute **cnfln** to modify line characteristics from the defaults. (Use **dspln** or **dsplns** to check). The syntax for **cnfln** is:

cnfln <*line_num*> <*line_code*> <*line_len*> <*clk_src*> [*E1-signallin*g]

- *line_num* is a line number in the range 1–8
- *line_code* is a number that specifies the line coding: 2=B8ZS (T1); 3=HDB3 (E1); and 4=AMI (T1/E1)
- *line_len* is the line length: 10-15 for T1; 8 for E1 with SMB line module; 9 for E1 with RJ-48 line module
- *clk_src* is a number specifying the clock source: 1 for loop clock; 2 for local clock
- *E1-signallin*g specifies the E1 signalling. The possible entries are
  - CAS, which specifies CAS and no CRC
  - CAS_CRC, which specifies CAS with CRC
  - CCS, which specifies CCS and no CRC
  - CCS_CRC, which specifies CCS with CRC
  - CLEAR: CLEAR channel

Step 3 Create a logical port with **addport** if the application requires *N* x 64Kbps channels:

addport <*port_num*> <*line_num*> <*begin_slot*> <*num_slot*> <*port_type*>

- *port_num* is the logical port number in the range 1–192 for T1 or 1–248 for E1
- *line_num* is the number of the physical line in the range 1–8
- *begin_slot* is the beginning timeslot number in the frame: for T1, 1–24; For E1 2–32 with CCS signalling or 2–16 and 17–32 with CAS signalling
- *num_slot* is the number of timeslots in the frame for the current port (*port_num*)
- *port_type* is: 1=structured 2=unstructured; 3=framing on VC disconnect

Step 4 Configure resources at the port level as needed by executing **cnfportrscprtn**:

cnfportrscprtn <*port_num*> <*controller_name*>

- *port_num* is the logical port number in the range 1–192 for T1 or 1–248 for E1.
- *controller_name* is the name of the network control application. Enter one of the following strings: PAR, PNNI, or MPLS.

Configuring Bulk Distribution and Redundancy

You can configure either bulk distribution alone, redundancy alone, or both of these features according to the restrictions in "Redundancy Support for the Eight-Port CESM." On the CLI of the PXM1, execute **addlink** for bulk distribution (T1 only) before you execute **addred** for redundancy. To configure bulk distribution:

- Execute **addlink** to create the links:

  addlink <*T3 line number*> <*T1 line number*> <*Target Slot number*> <*Slot line number*>

T3 line number	is the MGX-SRM-3T3/B line number in the format *slot.line*. The *slot* can be 15 or 31. The range for *port* is 1–3
T1 line number	is the starting T1 line number within the T3 line. The range for the T1 line number is 1–28.
Target Slot number	is slot number for the T1 service module.
Slot line number	is T1 line number in the range 1–8.

- Execute **addred**:

  addred <*redPrimarySlotNum*> <*redSecondarySlotNum*> <*RedType*>

redPrimarySlotNum	is the primary slot. For the redundancy bus (no bulk distribution), valid slot numbers are 1–6, 9–14, 17–22, and 25–30. With bulk distribution of T1 channels, do not specify 9, 10, 26, or 26.
redSecondarySlotNum	is the secondary slot. For the redundancy bus (no bulk distribution), valid slot numbers are 1–6, 9–14, 17–22, and 25–30. With bulk distribution of T1 channels, do not specify 9, 10, 26, or 26.
RedType	is the type of redundancy. A 1 specifies 1:1 for E1 with SMB connectors. A 2 specifies 1:N for T1 or E1.

Adding and Modifying Connections

Use either the Cisco WAN Manager application or the CLI to add or modify connections. If you use the WAN Manager application, refer to the *Cisco WAN Manager Operations Guide*.

This section describes how to add a connection to a PXM1 in a stand-alone switch according to the rules for a standard connection or a management connection in the form of either a three-segment connection or a DAX con. See “Rules for Adding Connections” earlier in this chapter. The preferred command is **addcon**. If the application requires NSAP addressing, use **addchan** to add the connection and **cnfchan** if you need to modify it. Refer to the command reference for the syntax. On the CESM CLI:

Step 1 Add a connection through the preferred command **addcon**. (Alternatively, you can use **addchan** if your application requires the NSAP format of end-point specification.)

Execute **addcon** at both ends of the connection—unless the remote end-point is on port 34 of a PXM1 (see the note at the end of this step). The maximum number of connections for the AX-CESM-8T1 is 248 and 192 for the AX-CESM-8E1. Note that because you can add only one connection per port, **addcon** does not request a connection number.

The system automatically assigns the next available *channel number*, so the **addcon** command does not require it. However, some related commands require a channel number. To see the channel number after you add a connection, use **dspcons**.

The syntax for **addcon** is:

addcon <*port_num*> <*sig_type*> <*partial_fill*> <*cond_data*> <*cond_signalling*> [*controller_type*] [*mastership*] [*remoteConnId*]

- *port_num* is the logical port number. This port must already exist (see **addport**).
- *sig_type* is a number indicating the type of signalling: 1 specifies basic signalling, 2 specifies E1 CAS, 3 specifies ds1SFCAS (DS1 Superframe CAS), and 4 specifies ds1ESFCAS (DS1 Extended Superframe CAS).
- *partial_fill* is a number representing the number of bytes in a cell. It can be either 0 to specify that the cell must contain 48 bytes or a non-0 value that fixes the number of bytes in each cell. For structured E1, the *partial_fill* range is 20–47 bytes. For structured T1, the range is 25–47 bytes. Unstructured T1 or E1 can be 33–47 bytes.
- *cond_data* is the conditioning data in case of loss of signal (LOS). It is always 255 for unstructured data transfer or 0–255 for structured data transfer. For a voice connection, the larger the *cond_data* value, the louder the hiss heard in case of LOS.
- *cond_signalling* is the string of condition signaling bits that you specify with a decimal number in the range 0–15, where, for example, 15=1111, and 0=0000. These bits represent the ABCD signalling to the line or network when an underflow occurs.
- *mastership* indicates whether this end-point is the master or slave; 1=master; 2=slave (default).
- *remoteConnId* is the identification for the connection at the slave end. The format is *switchname.slot_number.port_number.vpi.vci*.

Step 2 Optionally, you can use **cnfcon** to modify an individual connection. This command requires a channel number. If you add a connection by using **addcon**, you do not need to specify a channel number because the system automatically uses the next available number. To obtain the channel number for **cnfcon**, execute **dspcons**.

cnfcon <*port_num*> <*CDVT*> <*CLIP*> <*bufsize*> <*cbrclkmode*> <*isenable*> <*exttrigis*>

- *port_num* is the port number.
- *CDVT* is a tolerable variation for the arrival time of cells. For T1, the range is 125–24000 microseconds. For E1, the range is 125–26000 microseconds. Both require 125-microsecond increments.
- *CLIP* is CellLossIntegrationPeriod, an amount of time a connection can be in an error condition before an alarm is declared. The range is 1000-65535 milliseconds.

- *bufsize* is the egress buffer size in bytes. These buffers are used for tolerating variations in the cell delay. The size can be automatically computed, or you can enter a specific size in bytes.
- *cbrclkmode* is the clock mode for a circuit emulation connection. The values are 1–3:1 is synchronous; 2 is SRT. 3 is adaptive; SRT and adaptive are asynchronous clocking schemes.
- *isenable* is a flag to enable the idle code (ABCD signalling bits)–based cell suppression feature on a connection. If you enable this feature, idle suppression logic is activated so that suppression begins when valid idle ABCD bits are detected. This feature is valid for only single DS0 connections. Possible values are 1 to enable and 2 to disable.
- *exttrigis* is an enable for an external idle suppression trigger. With this feature enabled, the logic forcefully suppresses cells on a single DS0 connection. Enter a 1 to disable idle suppression or a 2 to enable idle suppression.

Step 3 Optionally, you can configure connection parameters for the network segment of a three-segment connection:

cnfswparms <*chan_num*> <*mastership*> <*vpcflag*> <*conn_service_type*> (=cos) <*route_priority*> <*max_cost*> <*restrict_trunk_type*> <*pcr*> <*mcr*> <*pct_util*>

- *chan_number* is the connection in the range 32–279.
- *mastership* specifies the current end-point as master or slave; 1=master; 2=slave (default.
- *vpcflag* indicates whether the connection is a VPC or a VCC: 1=VPC; and 2=VCC.
- *conn_service_type* selects the type of service for the connection: 1=cbr; 2=vbr; 3 is not used; 4=ubr; 5=atfr; 6=abrstd; and 7=abrfst.
- *route_priority* is the priority of the connection for rerouting. The range is 1–15 and is meaningful only in relation to the priority of other connections.
- *max_cost* is a number establishing the maximum cost of the connection route. The range is 1–255 and is meaningful only in relation to the cost of other connections.
- *restrict_trunk_type* is a number that specifies the type of trunk this connection can traverse. The numbers are 1 for no restriction, 2 for terrestrial trunk only, and 3 for satellite trunk only.
- *pcr* is the peak cell rate.
- *mcr* is the minimum cell rate. The range is 1–65535 cells per second.
- *pct_util* is the percent utilization in the range 1–100.

Service Resource Module

This section describes how to use the features of the T3 version of the Service Resource Module (MGX-SRM-3T3/B). This multipurpose card can provide:

- Demultiplexing of T3 service called *bulk distribution*.
- 1:N redundancy support for service modules with T1 or E1 lines.
- Bit error rate testing (BERT) for T3, E3, T1, E1, fractional T1, or subrate operation with loopback pattern generation and verification on individual lines or logical port. For a description of the BERT functions, see the section titled “Bit Error Rate Testing Through an MGX-SRM-3T3.”

An MGX-SRM-3T3/B installation requires at least one card set in the upper bay of the card cage and one card set in the lower bay. Each set services one half of the backplane. The PXM1 in slot 7 controls the SRMs in slots 15 and 31. The PXM1 in slot 8 controls the redundant SRMs in slots 16 and 32. If the switch has SRMs with redundant PXM1s, the SRMs must occupy all the reserved slots for this feature—15, 16, 31, and 32.

Configuring Card and Line Parameters

You can configure card and line-level parameters for an SRM through the CiscoView application or the CLI on the PXM1 (not the SRM itself. For descriptions of the commands, see the *Cisco MGX 8250 Wide Area Edge Switch Command Reference*. The CLI commands that apply to the SRM are:

- **addln**
- **delln**
- **cnfln**
- **dspln**
- **dsplns**
- **addlmiloop**
- **dellmiloop**
- **cnfsrmclksrc**
- **dspsrmclksrc**
- **dspalm**
- **dspalms**
- **dspalmcnt**
- **clralmcnt**
- **clralm**
- **dspalmcnt**
- **addlink**
- **dsplink**
- **dellink**
- **addred**
- **dspred**
- **delred**

Bulk Distribution for T1 Service

The MGX-SRM-3T3/B supports a demulitplexing function called *bulk distribution*. With bulk distribution, the MGX-SRM-3T3/B converts traffic from its T3 lines to T1 channels and sends the data streams across the *distribution bus* to the appropriate service modules. The benefit of this feature is that the number of T1 cables and back cards is greatly reduced. Applicable service modules are the MGX-AUSM/B-8T1, AX-FRSM-8T1, and AX-CESM-8T1.

At its MGX-BNC-3T3-M back card, the MGX-SRM-3T3/B connects to an external multiplexer. The multiplexer connects to the T1 lines from user-equipment and places the data streams on T3 lines to the MGX-SRM-3T3/B. Each T3 line can contain 28 T1 channels. An individual MGX-SRM-3T3/B can support 10 card slots, so the maximum number of T1 channels it can process is 80.

Linking the MGX-SRM-3T3/B to a destination card causes the switch to take CPE traffic through the MGX-SRM-3T3/B rather than the T1 card's line module. Linkage is a card-level condition. If you link just one T1 channel on a service module to the MGX-SRM-3T3/B, the back card on the service module becomes inoperative, so you must link all other T1 ports on that service module to the MGX-SRM-3T3/B if you want them to operate. Linking T1 ports into a group does not form an *N* l T1 channel. Each T1 channel remains a distinct T1 channel. Furthermore, a group belongs to one slot, so it cannot include T1 channels belonging to another card.

For a description of how the MGX-SRM-3T3/B supports redundancy for linked channels, see the section "Redundancy Support by the MGX-SRM-3T3/B" in this chapter.

Before configuring bulk distribution on an SRM, perform the following tasks:

1. Activate the lines (**addln** on the CLI).
2. Optionally configure the lines (**cnfln** on the CLI).
3. Display the state of the lines (**dspln** and **dsplns** on the CLI).

To link T1 ports on a service module to a T3 line on an MGX-SRM-3T3/B:

- Execute **addlink** on the active PXM1. Related commands are **dsplink** and **dellink**.

  addlink *<T3 line number> <T1 slot> <NumberOfT1s> <TargetSlotLineNum>*

T3 line number	is the line number in the format *slot.line*, where *slot* is 15 or 31 (regardless of whether redundant SRMs exist in slots 16 and 32), and the range for *line* is 1–3.
T1 slot	is the start T1 line number within the T3 line (range 1–28).
NumberOfT1s	is the slot number of the T1 service module. *Target Slot number* can be 1-6, 11-14, 17-22, or 27-30.
TargetSlotLineNum	is the T1 line number in the linked card slot. The range is 1–8.

Redundancy Support by the MGX-SRM-3T3/B

The MGX-SRM-3T3/B can provide redundancy to service modules with T1 or E1 lines. For E1 or T1 modules, it can provide redundancy through the *redundancy* bus. For T1 modules only, it can provide redundancy through the *distribution* bus. The *redundancy* and *distribution* buses impose different requirements, but the common requirement is that all primary and secondary cards supported by a particular MGX-SRM-3T3/B must reside on the same level of the card cage as that SRM.

The need for back cards and the choice of bus for redundancy support depends on whether the MGX-SRM-3T3/B must provide bulk distribution:

- With bulk distribution, the T1 service modules do not use back cards. The MGX-SRM-3T3/B uses the distribution bus to support redundancy.
- Without bulk distribution, the supported service modules must have back cards. The redundant card set requires a special redundancy back card (the R-RJ48-8T1 or R-RJ48-8E!). The primary card sets use standard back cards (RJ48-8T1 or RJ48-8E1).

With redundancy provided by the SRM, no Y-cables are necessary because the MGX-SRM-3T3/B itself passes the traffic to the redundant front card if a failure necessitates switchover. Conversely, any card with 1:1 redundancy supported by Y-cabling does not require an SRM. For example, the FRSM-VHS cards have 1:1 redundancy through a Y-cable. The MGX-SRM-3T3/B redundancy feature is particularly important for cards that do not have Y-cable redundancy—the T1 and E service modules.

Configuring Redundancy Through the Redundancy Bus

For redundancy that utilizes the redundancy bus, the characteristics are

- Both the primary and the redundant front cards must have back cards. The secondary back card must be the version specifically designed to be redundant cards. Examples are the R-RJ48-8T1 and R-RJ48-8E1, where the first "R" means redundant.
- An MGX-SRM-3T3/B can redirect traffic for only one failed card at a time regardless of the number of redundant groups you have configured to rely on that MGX-SRM-3T3/B for redundancy.

To configure redundancy through the redundancy bus:

Step 1 Execute **addred** on the active PXM1:

addred <*redPrimarySlotNum*> <*redSecondarySlotNum*> <*RedType*>

where:

redPrimarySlotNum	is slot number of the slot containing the primary card. The slot numbers are 1–6, 9–14, 17–22, and 25–30.
redSecondarySlotNum	is slot number of the slot containing the secondary card of the card pair. The ranges are 1–6, 9–14, 17–22, and 25–30.
RedType	is a number that specifies the type of redundancy. Enter a 1 to specify 1:1 redundancy. Enter a 2 to specify 1:N redundancy. Only an SRM can support 1:N redundancy.

Step 2 Check the redundancy status for all cards by using **dspred**.

To remove redundancy, use **delred**.

Configuring Redundancy Through the Distribution Bus

Redundancy by way of the distribution bus applies to T1 channels you linked for bulk distribution. For a redundancy configuration on the MGX-SRM-3T3/B that utilizes the distribution bus:

- No back cards are necessary.
- The MGX-SRM-3T3/B can support multiple switchovers for different 1: N redundancy groups.
- Slots 9, 10, 15, or 26 are not supported.

Before you specify redundancy with bulk distribution, linkage must exist between a T3 line on the MGX-SRM-3T3/B and a primary service module with the T1 lines. No linkage should exist on the secondary service module. To configure redundancy through the CLI:

Step 1 Execute **addred** on the active PXM1:

addred <*redPrimarySlotNum*> <*redSecondarySlotNum*> <*RedType*>

where:

redPrimarySlotNum	is slot number of the slot containing the primary card. Permissible slot numbers are in the range 1–6, 11–14, 17–22, and 27–30.
redSecondarySlotNum	is slot number of the slot containing the secondary card of the card pair. Permissible slot numbers are in the range 1–6, 11–14, 17–22, and 27–30.
RedType	is a number that specifies the type of redundancy. Enter a 1 to specify 1:1 redundancy. Enter a 2 to specify 1:N redundancy. Only an SRM can support 1:N redundancy.

Step 2 Check the redundancy status for all cards by using **dspred**.

To remove redundancy, use **delred**.

Bit Error Rate Testing Through an MGX-SRM-3T3

The MGX 8250 switch can perform a bit error rate test (BERT) on an active line or port. This type of testing disrupts service because a BERT session requires the tested path to be in loopback mode. In addition, the pattern test replaces user-data in the path with the test pattern. The applicable line types and variations for a DS1 are:

- A T1 or E1 line
- Fractional portions of a T1 line that add up to a DS1
- A single 56Kbps or 64Kbps DS0
- A DS0 bundle consisting of *N*x64Kbps DS0s

With a set of MGX-SRM-3T3/B cards in the system, you can initiate a BERT session on an MGX-FRSM-2CT3 or any 8-port service module. (In contrast, the MGX-FRSM-2T3E3, MGX-CESM-T3, and MGX-CESM-E3 do not use the MGX-SRM-3T3/B for BERT. See the sections for these service modules in this chapter for applicable BERT.)

The MGX 8250 bus structure supports one BERT session per upper or lower bay, so the switch can run a maximum of two sessions at once. When you specify the target slot through the CiscoView application or the CLI, the system determines if a BERT configuration already exists in that bay. After the system determines that no BERT configuration exists in the applicable bay, the display presents a menu for the BERT parameters.

The CLI commands (whose functions correspond to CiscoView selections) are:

- **cnfbert** to configure and start a test
- **modbert** to inject errors into the BERT bit stream
- **dspbert** to display the parameters and results of the current test
- **delbert** to end the current test

Note When a BERT session begins, all connections on a line or port go into alarm and return to normal when the test ends. Consequently, the test may result in other types of traffic (such as AIS).

During configuration, the parameter display or menu items depend first on the card type and whether the test medium is a physical line or a logical port. Subsequent choices are test type, test patterns, loopback type, and so on. See the *Cisco MGX 8000 Series Command Reference* for details on **cnfbert** and the other BERT commands. The concatenation of menu to menu is extensive, so this section contains tables of menu selections based on the card types and the test type.

The test type can be *pattern*, *loopback*, or *DDS seek*. The choice of test type leads to further menu displays. Following the tables of menu choices, the remaining sections define the parameters in these menu choices.

- For AX-FRSM-8T1, AX-CESM-8T1, and MGX-FRSM-2CT3, see Table 6-5 pattern tests and Table 6-6 for loopback tests.
- For AX-FRSM-8E1 and AX-CESM-8E1, see Table 6-7 for pattern tests and Table 6-8 for loopback tests.
- For MGX-AUSM-8T1, see Table 6-9 for pattern tests and Table 6-10 for loopback tests.
- For MGX-AUSM-8E1, see Table 6-11 for pattern and Table 6-12 loopback tests.

Table 6-5 Pattern Test for AX-FRSM-8T1, AX-CESM-8T1, and MGX-FRSM-2CT3

Test Medium	Medium Type	Device to Loop	BERT Pattern
Port	Port with *N* timeslots (can also submit to the DDS seek test)	v54	all patterns
	Port with one 64-Kbps timeslot (can also submit to the DDS seek test)	latch or v54	all patterns
	Port with one 56-Kbps timeslot (can also submit to the DDS seek test)	noLatch latch or v54	2^9 or 2^{11} all patterns
Line	n/a	in-band/ESF or metallic	all patterns

Table 6-6 Loopback Test for AX-FRSM-8T1, AX-CESM-8T1, and MGX-FRSM-2CT3

Test Medium	Medium Type	Loopback
Port	Port with *N* timeslots (can also submit to the DDS seek test)	far end or remote
	Port with one 64Kbps timeslot (can also submit to the DDS seek test)	far end or remote
	Port with one 56Kbps timeslot (can also submit to the DDS seek test)	far end or remote
Line	n/a	metallic, far end, or remote

Table 6-7 Pattern Test for AX-FRSM-8E1 and AX-CESM-8E1

Test Medium	Medium Type	Device to Loop	BERT Pattern
Port	any	none	all patterns
Line	n/a	metallic	all patterns

Table 6-8 Loopback Test for AX-FRSM-8E1 and AX-CESM-8E1

Test Medium	Medium Type	Loopback
Port	any	remote loopback
Line	n/a	metallic or remote

Table 6-9 Pattern Test for MGX-AUSM-8T1

Test Medium	Medium Type	Device to Loop	BERT Pattern
Line	n/a	in-band/ESF	all patterns

Table 6-10 Loopback Test for MGX-AUSM-8T1

Test Medium	Medium Type	Loopback
Line	n/a	far end, remote, or metallic

Table 6-11 Pattern Test for MGX-AUSM-8E1

Test Medium	Medium Type	Device to Loop	BERT Pattern
Line	n/a	none	all patterns

Table 6-12 Loopback Test for MGX-AUSM-8E1

Test Medium	Medium Type	Loopback
Line	n/a	remote or metallic

Pattern Test Options

The pattern test options consist of the device to loop and the pattern. This section lists the device options and patterns that appear in the menus. Refer to the preceding tables as needed. The *device to loop* options identify the type of device that participates in the test:

- *noLatch* is a device that does not latch the data. It can be a:
  - Non-latching office channel unit (OCU) that consists of one device
  - Non-latching OCU that consists of a chain of devices
  - Non-latching channel service unit (CSU)
  - Non-latching data service unit (DSU)
- *Latch* is a device that can latch the data and can be a:
  - Latching DS0-DP drop device
  - Latching DS0-DP line device
  - Latching office channel unit (OCU)
  - Latching channel service unit (CSU)
  - Latching data service unit (DSU)
  - Latching HL96 device
- *in-band/ESF*
- *v54* is a polynomial loopback
- *metallic* is a local loopback within the service module and does not involve an external device

The available patterns are:

1. All 0s
2. All 1s
3. Alternating 1-0 pattern
4. Double 1-0 pattern
5. 2^{15}-1 pattern
6. 2^{20}-1 pattern
7. 2^{20}-1 QRSS pattern
8. 2^{23}-1 pattern
9. 1 in 8 pattern
10. 3 in 24 pattern
11. DDS-1 pattern
12. DDS-2 pattern
13. DDS-3 pattern

14. DDS-4 pattern
15. DDS-5 pattern
16. 2^9 pattern
17. 2^{11} pattern

Loopback Test Options

The loopback tests do not monitor the integrity of the data but rather the integrity of the path. The type of loopback indicates the direction of test data transmission. The choices are:

- *far end* means the service module transmits data to the CPE and receives the data back
- *remote* means the service module receives data from the CPE and loops back to the CPE
- *metallic* means the service module receives data from the network and loops it back to the network

APPENDIX A

System Specifications

This appendix contains information for the hardware that makes up a Cisco MGX 8250 switch. The descriptions apply to the enclosure, power systems, cooling system, and cards. The types of information consist of:

- Operational ranges, such as bits per second, voltage ranges, and temperature ranges
- Physical layer characteristics, such as line coding and line framing
- Standards compliance, supported protocols, and tolerances, such as parts per million (ppm) for clocks and jitter
- Per card capacities, such as types and sizes of memory, number of ports, and maximum number of connections

Enclosure and System Power Specifications

This section describes the physical characteristics and system power requirements for the MGX 8250 switch. For a list of the dimensions, weight, and power consumption for each card, see "Physical and Electrical Characteristics for Cards" in this appendix. For a list of the AC power plugs for domestic and international use, see Appendix B, "Cabling Summary."

Refer to Table A-1 for enclosure and system electrical characteristics.

Table A-1 Enclosure and Electrical Characteristics

Item	Value
Card Slot Capacity	Supports combinations of full and single-height service modules. Two double-height slots reserved for PXMs. Up to 28 single-height slots for service modules or up to 14 double-height slots for service modules.
Enclosure Size, AC-powered system	Height: 33.25 inches (45.5 cm). Width: 17.75 inches (45.08 cm) for all enclosure modules, so the rack must have this minimal, inner width. If a 19-inch rack cannot provide it, use a 23-inch rack. Depth: 27.0 inches (68.6 cm).
DC-powered system	Height: 28 inches (71.1 cm.). Width: 17.75 inches (45.08 cm) for all enclosure modules, so the rack must have this minimal, inner width. If a 19-inch rack cannot provide it, use a 23-inch rack. Depth: 27.0 inches (68.6 cm) with cable manager, 21.5 inches (54.6 cm) without cable manager.
Shipping Weight for Populated Enclosure	DC: 190 lbs (87 Kgs) with 2 DC PEMs. AC: 230 lbs (104.5 Kgs).
Shipping Weight for Individual Components	Single-height, front and back cards: 2.48 lbs (1.13 Kgs) Double-height, front and back cards: 6.0 lbs (2.73 Kgs) Card cage with boards: 160 lbs (72.73 Kgs) Exhaust plenum: 8 lbs Fan tray: 9.5 lbs Inlet plenum: 8 lbs AC power tray with power supplies: 45 lbs
Clearance Requirement for the Enclosure	Minimum 30 inches front and rear; nominal 12-inch side clearance.
220VAC System Power Input Voltage	AC system: Normal operating range is 200–240 VAC, 47 to 63 Hz. The maximum voltage range is 180–264 VAC. DC system: –42 to –56 VDC. Each AC supply can provide up to 1200 watts.
Low Profile System Power Input Voltages	AC system: Normal operating range is 100–240 VAC, 47 to 63 Hz. The maximum voltage range is 90–264 VAC. Each AC supply can provide up to 1200 Watts at 48 VDC. DC system: –42 to –56 VDC.
220VAC System Current Requirements	Configuration-dependent: use Network Design Tool for exact requirements. For general planning purposes: 14.4 Amps at a nominal voltage of 200 VAC. At the minimum voltage limit of 180 VAC, the current draw is a maximum of 16 Amps.

Table A-1 Enclosure and Electrical Characteristics (continued)

Item	Value
Low Profile System Current Requirements	AC System: Configuration-dependent: use Network Design Tool for exact requirements, 13 Amps maximum. DC System: Configuration-dependent: use Network Design Tool for exact requirements. For general planning purposes: 25 Amps at nominal –48 VDC; 29 Amps at –42 VDC maximum.
Current Requirements, DC System	Configuration-dependent: use Network Design Tool for exact requirements. For general planning purposes: 43.2 Amps at nominal –48 VDC; 49.4 Amps at –42 VDC maximum.
Input AC Power Connector	IEC 16-Amp input connector. For a list of the AC power plugs for domestic and international use, see Appendix B, "Cabling Summary."
DC Input Connections	Three-position terminal block for 6 AWG wire (10 square millimeters) and #10 screw lugs designed for 6 AWG wire.
Operating Environment	0–40 degrees Celsius (32–104 degrees Fahrenheit) normal operation (50 degrees Celsius or 122 degrees Fahrenheit up to 72 hours). Maximum 85% relative humidity.
Shock	Withstands 10 G, 10 ms at 1/2 sine wave.
Vibration	Withstands 1/4 G, 20–500 Hz.
Heat Transfer to Environment	AC-powered: maximum 9560 BTUs. DC-powered: maximum 8200 BTUs.

Physical and Electrical Characteristics for Cards

For quick reference, Table A-2 shows physical dimensions and power consumption for each card. Detailed information for each card appears in the section of this appendix for a specific card.

Table A-2 Physical Characteristics and Power Consumption by Card

Module	Back Cards	Front Card Dimensions (inches)	Back Card Dimensions (inches)	Weight (front and back card)	Power Consumption
MGX-FRSM-8T1 MGX-FRSM-8E1 MGX-FRSM-8T1c MGX-FRSM-8E1c	8 T1, 8 E1	7.25 x 16.25	7.00 x 4.50	1.74 lbs/ 0.76 lbs	30 watts
MGX-FRSM-2CT3	2 T3	7.25 x 16.25	7.00 x 4.50	1.74 lbs/ 0.76 lbs	60 watts
MGX-FRSM-2T3E3	2 T3, 2 E3	7.25 x 16.25	7.00 x 4.50	1.74 lbs/ 0.76 lbs	60 watts
MGX-FRSM-HS2	2 HSSI	7.25 x 16.25	7.00 x 4.50	1.74 lbs/ 0.6 lbs	75 watts
MGX-CESM-8T1E1	8 T1, 8 E1	7.25 x 16.25	7.00 x 4.50	1.74 lbs 0.76 lbs	30 watts

Table A-2 Physical Characteristics and Power Consumption by Card (continued)

Module	Back Cards	Front Card Dimensions (inches)	Back Card Dimensions (inches)	Weight (front and back card)	Power Consumption
MGX-CESM-T3E3	2 T3, 2 E3	7.25 x 16.25	7.00 x 4.50	1.74 lbs/ 0.76 lbs	60 watts
MGX-AUSM/ B-8T1E1	8-T1, 8-E1	7.25 x 16.25	7.00 x 4.50	1.74 lbs 0.76 lbs	30 watts
RPM	4-Ethernet, 1-FE (RJ-45/mmf), 1-FDDI (smf, mmf) Up to 2 back cards	15.65 x15.9	7.00 x 4.125	4.80 lbs	110 watts
PXM1	2 T3/E3, OC-3c/STM-1, OC12c/STM-4, VI	15.65 x 15.83	7.00 x 4.5	4.80 lbs	100 watts

Electromagnetic Compatibility and Immunity

This section lists the national and international standards for electromagnetic compatibility and immunity to which this Cisco product complies. It consists of a list of reference documents, a table that indicates applicability of the standards, and the test levels for mandatory and non-mandatory CE mark immunity.

The applicable standards for electromagnetic compatibility and immunity:

- NEBS Systems Requirements (GR-1089-CORE, GR-63-CORE).
- EN 55022/08.94 (EMC Directive 89/336/EEC).
- EN 50081-1/01.92 and EN 50082-1/01.92 (Generic Immunity Requirements), International Electromechanical Commission (IEC 1000-4-2 through IEC 1000-4-13 / European Norm designation EN 61000-4-2 through EN 61000-4-13.
- Cisco Systems Electronic Design Validation Test (EDVT) Plan ABC-123, Rev A, dated 1/29/1996.
- Cisco Systems Mechanical Environmental Design and Qualification Guideline (ENG-3396, Rev. 7).
- European Telecommunication Standards Institute (ETSI) ETS 300 386-1 (December 1994).

Details on how each standard applies in this Cisco product appear in Table A-3.

Table A-3 Electromagnetic Compatibility and Immunity

Category	AC-Powered (220 VAC)	DC-Powered (-48V)
U.S.A EMC	FCC Part 15, Class A	not applicable
Japan EMC	Austel 3548 Class A	not applicable
Australia EMC	VCCI Class A	not applicable

Table A-3 Electromagnetic Compatibility and Immunity (continued)

Category	AC-Powered (220 VAC)	DC-Powered (-48V)
CE M mark (EMC and immunity)	EMC: EN 55022 Class A Immunity: • EN 50082-1 (generic immunity) • EN 61000-4-2 through -5 (mandatory) • EN 61000-4-6 through -13 (not mandatory)	not applicable
NEBS (EMC and immunity)	not applicable	EMC: GR-1089-CORE Class A (radiated and magnetic fields) and line conductance. Immunity: GR-1089-CORE ESD (8 KV contact) RS (10 V/meter) CS (clause 3.3.3) European Telecom Standards (ETSI) for Surge: ETSI 300 386-1, DC power leads only (200 VAC–1000 VAC)
EDVT	Cisco Systems: Electronic Design Validation Test (EDVT) Plan ABC-123, Rev. A, dated 1/29/1996	Cisco Systems: Electronic Design Validation Test (EDVT) Plan ABC-123, Rev. A, 1/29/1996—DC power cycling portions only.
MDVT	Cisco Systems: Mechanical Environmental Design and Qualification Guideline, ENG-3398, Rev. 7.	NEBS requirements, physical: (GR-63-CORE, Issue 1, October, 1995). See mandatory CE mark immunity tests in forthcoming list.

The levels for the mandatory CE mark immunity tests are:

- For IEC 1000-4-2 (ESD), the test level is 4.
- For IEC 1000-4-3 (RS), the test level is 3.
- For IEC 1000-4-4 (EFT), the test level is 4.
- For IEC 1000-4-5 (Surge), the test level is 3.

The levels for the non-mandatory CE mark immunity tests are:

- For IEC 1000-4-6 and ENV 50141 (conducted disturbances induced by RF fields), the test level is 3.
- For IEC 1000-4-7 and EN 610009-3-2 (harmonics and interharmonics), the test level is Class B.
- For IEC 1000-4-8 (Power Frequency Magnetic Fields), the test level is 3.

- For IEC 1000-4-9 (pulse magnetic field), the test level is 3.
- For IEC 1000-4-10 (damped oscillatory magnetic field), the test level is 3.
- For IEC 1000-4-11 (voltage dips, interruptions, and variations), no test level applies, as defined by the manufacturer per the functionality of EUT.
- For ENV 50140 (RF immunity at 800 MHz), the test level is 3.

Processor Switching Module Specifications

This section contains general specifications for the Processor Switching Module (PXM). The information in Table A-4 includes information for the two types of back cards—the PXM-UI user interface for switch and the uplink card for trunking and CPE access.

Table A-4 PXM Specifications

Category	Description
Maximum switch fabric throughput	1.2 Gbps
Control access: these ports exist on the PXM-UI back card	Control port: RJ-45 connector, EIA/TIA 232, DTE mode, asynchronous interface 19,200 baud, 1 start, 1 stop, no parity Maintenance port: RJ-45 connector, EIA/TIA 232, DTE mode, asynchronous interface 9600 baud, 1 start bit, 1 stop bit, no parity bits LAN port: RJ-45 connector, 10-BASET, 802.3 Ethernet
Uplink ports and connectors: an uplink card can have one of these number and type of connectors. The wave-length on optical lines is 1310 nm.	2 T3 ports, BNC connectors 2 E3, BNC connectors 4 OC-3 multi-mode fiber, SC connectors 4 OC-3 single-mode fiber, intermediate reach, SC connectors 4 OC-3 single-mode fiber, long reach, SC connectors 1 OC-12 single-mode fiber, intermediate reach, SC connectors 1 OC-12 single-mode fiber, long reach, SC connectors
Number of logical ports:	32 across all physical ports on the uplink card (regardless of line type)

Table A-4 PXM Specifications (continued)

Category	Description
LEDs on PXM front card: LEDs display status, but alarm history is a switch	Status for the card: • Green means active. • Red means failed. • Yellow indicates the standby card. LAN activity: flashing green indicates activity. Switch alarm: • Red indicates major alarm. • Yellow indicates minor alarm. Switch power (note that each AC power supply also has an LED): • "DC OK A" is green for okay or red for trouble. • "DC OK B" is green for okay or red for trouble. Alarm history: ACO Port interface (per port): • Green means active and okay. • Red means active and local alarm. • Yellow means active and remote alarm. • No light means inactive or not provided.
LEDs on back cards	Green means active. No light means inactive or not provided.
Synchronization: (these clock sources satisfy Stratum 4 requirements)	8 KHz clock derived from the following sources: • Internal 8 KHz clock (10 ppm). • Service modules or trunk line interfaces. • External BITS clock port. • T1 clock rate 1.544 MHz +/- 50 bps. • E1 clock rate 2.048 MHz +/- 100 bps (can be either sync or data signal).
BITS clock interface	T1 with an RJ-45 connector. E1 with an SMB connector.
Trunk history counters	Ingress, per connection: Number of received cells with CLP=0. Number of received cells with CLP=1. Egress, per connection: Number of received cells. Number of transmitted cells. Number of received cells with EFCI bit set. Number of transmitted cells with EFCI bit set.

Table A-4 PXM Specifications (continued)

Category	Description
Connection capacities supported by PXM	Maximum number of connections: 16,000 bi-directional channels for local switching. 32,000 bi-directional channels for switching across uplink card. Maximum aggregate bandwidth: 600 Mbps local switching (service module to service module). 1,200 Mbps switching across uplink. Cell memory: 256K cells.
Processor clock speed and memory specifics	Clock speed: 200 MHz internal, 50 MHz external. Flash memory: 2 MB DRAM: 64 Mbytes, upgradeable to 128 MB Secondary cache: 512 KB BRAM: 128 KB Hard disk: 4 GB
Alarm indicators (audible and visual)	Central office-compatible alarm indicators and controls through a DB-15 connector
Maintenance features	Internal isolation loopback. External remote loopback. Hot-pluggable.
Card dimensions	Front card: 15.65 inches by 16.83 inches (39.75 cm by 42.75 cm). Back cards: 7.25 inches by 4.125 inches (18.42 cm by 10.48 cm).
Power	Requires –48 VDC, dissipates 100 W.

MGX-AUSM/B-8T1E1 Interface Characteristics

This section contains details for the MGX-AUSM/B-8T1E1. For physical characteristics, see Table A-5. For the T1 and E1 characteristics, see Table A-6 and Table A-7, respectively. For ATM interface characteristics, see Table A-8. For statistics and counters, see Table A-9.

Table A-5 Physical Characteristics of the 8-Port MGX-AUSM/B

Category	Description
LED Indicators Per Card	Active (green), Standby (yellow), Fail (red)
LED Indicators Per Line	One per line: Active and OK (green), Active and Local Alarm (red), Active and Remote Alarm (yellow)
Maintenance and Serviceability	Facility loopback via loop up/down per ANSI T1.408 and ATT TR 62411 (T1), CCITT G.7xx (E1) Facility loopback via management console internal problem isolation loopbacks Hot pluggable
Card Size	Front card: 7.25" x 16.25" (18.43 cm x 41.28 cm) Back cards: 7" x 4.5" (17.78 cm x 11.43 cm)

Table A-5 Physical Characteristics of the 8-Port MGX-AUSM/B (continued)

Category	Description
Power	–48 VDC, 30 W
Safety	EN 60950 2nd edition (including EN 41003) UL 1950 2nd edition
Compliance	T1: Accunet 62411 E1: G.703, G.823
ESD	IEC 1000-4-2

Table A-6 T1 Interface Characteristics

Category	Description
Line Interface	RJ48 (omega) on the LM-RJ48-8T1 back card
Line Rate	1.544 Mbps ± 50 bps (T1)
Synchronization	Transmitter can be: loop-timed, Receiver, or synchronized to switch (normal mode)
Line Code	Bi-polar 8 Zero Substitution (B8ZS) per ANSI T1.408 (T1)
Line Framing	Extended Superframe Format (ESF 24 frame multiframe) per ANSI T1.408
ESF Maintenance	Bit-oriented alarm and loopback messages of ESF Data Link per ANSI T1.408
Input Jitter Tolerance	Per ATT TR 62411
Output Jitter	Per ATT TR 62411 using normal mode synchronization
Physical Layer Alarms	LOS, OOF, AIS, RAI
Physical Layer Performance Statistics	LCV, LES, LSES, CV, ES, SES, SEFS, AISS, UAS

Table A-7 E1 Interface Characteristics

Category	Description
Line Interface Connector	RJ48 (120 omega) on LM-RJ48-8E1, or SMB (75 omega) on LM-BNC-8E1
Line Rate	2.048 Mbps ± 100 bps
Synchronization	Transmitter can be: loop-timed, Receiver, or synchronized to shelf (normal mode)
Line Code	HDB3 (E1)
Line Framing	16-frame multiframe as in G.704
Input Jitter Tolerance	As specified in ITU G.823 for 2.048 Mbps
Output Jitter Generation	As specified in ITU G.823 for 2.048 Mbps
Physical Layer Alarms	LOS, OOF, AIS, RAI
Physical Layer Statistics	LCV, LES, LSES, CV, ES, SES, SEFS, AISS, UAS

Table A-8 ATM Interface Characteristics

Category	Description
Standards	ATM UNI v3.1, ITU-T G.804, per CCITT I.361.
Channel Configuration	1000 per card, across any of the T1 or E1 ports.
VPI/VCI Ranges	VPI: 0–255. VCI: 0–4096.
Traffic Classes	CBR, VBR, VBR+.
UPC Parameters	PCR, SCR (VBR), CCDV (CBR).
Congestion Control Support	ForeSight (towards Network for VBR+).
ForeSight Parameters	MIR, PIR, Rate Up, Rate Down, QIR, QIR Timeout, IBS.

Table A-9 MGX-AUSM/B-8T1E1 Statistics and Counters

Counter Type	Description
Per Port	Number of cells received from the interface. Number of cells received with unknown VPI/VCI. Last known VPI/VCI received from the port. Number of cells discarded due to error in Cell Header. Number of cells received with non -zero GRC field. Number of cells transmitted to the interface. Number of cells transmitted for which EFCI was set. Number of egress cells discarded due to service interface physical alarm.
End-point (channel)	
Ingress	Number of cells received from port. Number of cells received from the port with CLP = 1. Number of cells received from the port with EFCI = 1. No, of cells from the port discarded due to queue exceeded QDepth. Number of cells (with CLP) set) discarded due to queue exceeded CLP threshold. Number of cells from the port for which CLP was set due to UPC violations.
ATMizer channel counters	
Ingress	Number of cells transmitted to cell bus. Number of cells to cell bus for which EFCI was set. Number of cells to cell bus discarded due to shelf alarm.
Egress	Number of cells received from the cell bus. Number of cells discarded due to queue exceeded QDepth (per Egress Q). Number of cells discarded due to queue exceeded CLP threshold (per Egress Q). Number of cells received with CLP = 1.
Other Counters	

Table A-9 MGX-AUSM/B-8T1E1 Statistics and Counters (continued)

Counter Type	Description
Ingress	Number of OAM cells discarded. Number of AIS cells received from the port. Number of RDI (FERF) cells received from the port. Number SegmentLpBk cells received from the port. Number of SegmentLpBk cells transmitted to cell bus.
Egress	Number of OAM cells discarded. Number of AIS cells transmitted to the port. Number of SegmentLpBk cells transmitted to the port. Number of SegmentLpBk cells received from the port.
Diagnostic Statistics	Peak Queue Depth (Ingress: per channel).

MGX-FRSM-2CT3 Specifications

This section provides details for the following topics:

- Transport technology standards with which the card complies. (See Table A-10.)
- General physical attributes of the card, such as LEDs on the faceplate. (See Table A-11.)
- Line and framer characteristics. (See Table A-12 and "MGX-FRSM-2CT3 Framer" section.)
- Line alarms. (See "MGX-FRSM-2CT3 Line Alarms" section.)

Table A-10 Frame Relay Interface Standards

Interface	Standard
Frame Relay Interface	ANSI T1.618, 2-octet header
ATM Layer	CCITT I.361 and ATM UNI v3.1
AAL Layer	AAL5 per Draft CCITT I.363
FR-Cell Interworking	Per Draft CCITT I.555 and I.36x.1, as summarized in *ATM-to–Frame Relay Interoperability Implementation Agreement"* v1.0

Table A-11 MGX-FRSM-2CT3 Front Card Physical Characteristics

Feature	Significance or Value
Power	48 VDC, 50 W (estimated)
Card Status Indicator LEDs	Active (Green) Failed (Red) Standby (Yellow)
Line Status Indicator LEDs	Active & Okay (Green) Active & Local Alarm (Red) Active & Remote Alarm (Yellow)
Reliability	> 85000 hours MTBF (target)
Card Size	7.25 inches by 16.5 inches

Table A-12 MGX-FRSM-2CT3 Line Level

Feature	Significance or Value
Number of T3 Lines	2
Line Interface Connector	75 ohm BNC
Line Rate	44.736 Mbps +/- 20 ppm
Line Coding	B3ZS
Transmit Timing	Normal or Loop timed
Input Jitter Tolerance	Per TR-TSY-000499
Output Jitter	0.05 UI maximum with jitter-free input clock
Output Pulse	Per T1.102.1993

MGX-FRSM-2CT3 Framer

The MGX-FRSM-2CT3 line framer:

- Supports M13 or C-bit parity format.
- Performs required inversion of second and fourth multiplexed DS1 streams per ANSI T1.107.
- Generates loop-up code to the far-end device to loop back any of the DS1s or entire DS3 signal stream by way of the FEAC channel.
- Automatically detects the incoming loop-up codes from the far-end device as well as loop back any of the DS1s or entire DS3 signal stream back to the far-end device. The loopback occurs at the M13 framer chip.

MGX-FRSM-2CT3 Line Alarms

For line alarms, the MGX-FRSM-2CT3 supports:

- Detection and generation of Remote Alarm Indicator (RAI) signal (also known as FERF and Yellow signal)
- Detection and generation of Alarm Indication Signal (AIS)
- Detection of Out Of Frame (OOF) condition
- Detection of Loss Of Frame (LOS) condition
- Automatic generation of Far End Block Error (FEBE)

MGX-FRSM T3 and E3 Specifications

This section provides details for the MGX-FRSM-2T3E3. Where appropriate, it has separate sections for T3 and E3 technologies. Topics consist of:

- Transport technology standards with which the card complies. (See Table A-13.)
- General physical attributes of the card, such as LEDs on the faceplate. (See Table A-14.)

- Line and framer characteristics for T3 operation. (See Table A-14 and “T3 Framer Level.”)
- Line and framer characteristics for E3 operation. (See Table A-16 and “E3 Framer Level.”)
- Line alarms. (See “MGX-FRSM T3 and E3 Line Alarms.”)

Table A-13 Frame Relay Interface Standards

Interface	Standard
Frame Relay Interface	ANSI T1.618, 2-octet header
ATM Layer	CCITT I.361 and ATM UNI v3.1
AAL Layer	AAL5 per Draft CCITT I.363
FR-Cell Interworking	Per Draft CCITT I.555 and I.36x.1, as summarized in *ATM-to–Frame Relay Interoperability Implementation Agreement*” v–1.0

Table A-14 MGX-FRSM-2T3E3 Front Card Physical Characteristics

Feature	Significance or Value
Power	48 VDC, 50 W (estimated)
Card Status Indicator LEDs	Active (Green), Failed (Red), Standby (Yellow)
Line Status Indicator LEDs	Active & Okay (Green), Active & Local Alarm (Red), Active & Remote Alarm (Yellow)
Reliability	> 85000 hours MTBF (target)
Card Size	7.25 inches by 16.5 inches

MGX-FRSM T3 Line

The T3 line characteristics appear in Table A-15.

Table A-15 T3 Line Level

Feature	Significance or Value
Number of T3 Lines	2
Line Interface Connector	75 ohm BNC
Line Rate	44.736 Mbps +/- 20 ppm
Line Coding	B3ZS
Transmit Timing	Normal or Loop timed
Input Jitter Tolerance	Per TR-TSY-000499
Output Jitter	0.05 UI maximum with jitter-free input clock
Output Pulse	Per T1.102.1993

T3 Framer Level

For the framing characteristics of T3 operation, the MGX-FRSM-2T3E3:

- Supports C-bit parity and M13 DS3 format.
- Frames to a DS3 signal with a maximum average reframe time per TR-TSY-000009 and TR-TSY-000191.
- Detects the alarm indication signal (AIS) in milliseconds in the presence of a 10^{-3} bit error rate.
- When in-frame, indicates M-bit or F-bit framing errors as well as P-bit errors. In C-bit parity mode, it also indicates both C-bit parity errors and far end block errors.

MGX-FRSM E3 Line

For characteristics of the line on an MGX-FRSM-2T3E3 with an E3 back card:

Table A-16 E3 Line Level

Feature	Significance or Value
Number of E3 Lines	2
Line Interface Connector	75 ohm BNC
Line Rate	34.368 Mbps +/- 20 ppm
Line Coding	HDB3
Transmit Timing	Normal or Loop timed
Input Jitter Tolerance	Per G.823
Output Jitter	0.05 UI maximum with jitter-free input clock per G.823
Output Pulse	Per G.703

E3 Framer Level

For line framing, the E3 operation of the MGX-FRSM-2T3E3 complies with G.751.

MGX-FRSM T3 and E3 Line Alarms

For line alarms, the MGX-FRSM-2T3E3 supports:

- Detection and generation of Remote Alarm Indicator (RAI) signal (also known as FERF and Yellow signal)
- Detection and generation of Alarm Indication Signal (AIS)
- Detection of Out Of Frame (OOF) condition
- Detection of Loss Of Frame (LOS) condition
- Automatic generation of Far End Block Error (FEBE)

Statistics and Counter Specifications

For lists of applicable statistics and counters, “Counters and Statistics for FRSM-VHS Cards” in this appendix.

MGX-FRSM-HS2 Specifications

The MGX-FRSM-HS2 is the Frame Relay module with two HSSI ports. The topics in this section are:

- Transport technology standards with which the card complies. (See Table A-17.)
- General physical attributes of the card, such as LEDs on the faceplate. (See Table A-18.)
- Line and framer characteristics. (See Table A-19.)

For lists of the counters and statistics that are available on the MGX-FRSM-VHS series of cards, see “Counters and Statistics for FRSM-VHS Cards” in this appendix.

Table A-17 Frame Relay Interface Standards

Interface	Standard
Frame Relay Interface	ANSI T1.618, 2-octet header
ATM Layer	CCITT I.361 and ATM UNI v3.1
AAL Layer	AAL5 per Draft CCITT I.363
FR-Cell Interworking	Per Draft CCITT I.555 and I.36x.1, as summarized in *ATM-to–Frame Relay Interoperability Implementation Agreement* v1.0

Table A-18 MGX-FRSM-HS2 Physical Characteristics

Feature	Significance or Value
Power	48 VDC, 50 W (estimated) The SCSI2-2HSSI back card consumes 5 watts at 5 VDC and 6 watts at -5 VDC.
Card Status Indicator LEDs	Active (Green) Failed (Red) Standby (Yellow)
Line Status Indicator LEDs	Active & Okay (Green) Active & Local Alarm (Red) Active & Remote Alarm (Yellow)
Reliability	> 85000 hours MTBF (target)
Card Size	Front card: 7.25” x 16.25” (18.43 cm x 41.28 cm) Back card: 7” x 4.5” (17.78 cm x 11.43 cm)

Table A-19 MGX-FRSM-HS2 Line Characteristics

Feature	Significance or Value
Number of HSSI Lines	2
Connector Type	SCSI-2
Line Rate	44.736 Mbps +/- 20 ppm
Line Coding	B3ZS
Line Framing	not applicable
Line Alarms	• Control lead is inactive • Recovered clock does not match configured line rate
Synchronization	Transmitter may be either loop-timed to receiver (DTE mode), or synchronized to shelf, (DCE mode)
Input Jitter Tolerance	Per TR-TSY-000499
Output Jitter	0.05 UI maximum with jitter-free input clock
Output Pulse	Per T1.102.1993

Counters and Statistics for FRSM-VHS Cards

This section lists counters and statistics that apply to most types of cards in the FRSM-VHS group (MGX-FRSM-2CT3, MGX-FRSM-2T3E3, and MGX-FRSM-HS2).

Counter
Received frames lost due to aborts
Received frames lost due to illegal header (EA bit)
Received frames lost due to CRC errors
Received frames with bit alignment errors
Received frames with unknown DLCI
Received frames with illegal frame length
Received good frame
Transmit frames lost due to under-run/Abort count
Transmit good frame
LMI status inquiry request count
LMI signaling protocol (keep-alive time-out count)
LMI sequence number error count
LMI status transmit count (in response to request)
LMI update status transmit count (in response to configuration changes

Counter
Frames with FECN set count
Frames with BECN set count
DE frames discarded count
Number of frames reassembled but discarded due to service interface physical layer alarm

Table A-20 Service-Related Statistics

Service Statistic
Number of received frames
Number of bytes received
Number of frames received with DE=1
Number of frames received but discarded
Number of received bytes discarded
Number of frames received but discarded due to:
CRC error
Illegal frame length
Alignment error
Abort
Number of frames reassembled and transmitted
Number of frames reassembled and transmitted with DE=1
Number of frames discarded due to reassembly errors
Number of frames transmitted
Number of bytes transmitted
Number of frames transmitted with DE set
Number of frames transmitted during LMI logical port alarm
Frames FECN set count
Frames BECN set count
Number of transmit frames discarded
Number of transmit bytes discarded
Number of transmit frames discarded due to:
CRC error
Illegal frame length
Alignment error
Abort
DE egress queue threshold exceeded
Physical link failure

Table A-21 ATM Cell-Related Statistics

ATM Cell Statistic
Number of cells transmitted to PXM
Number of cells discarded due to intershelf link alarm
Number of cells transmitted with CLP bit set
Number of AIS cells transmitted
Number of FERF cells transmitted
Number of BCM cells transmitted
Number of end-end loop-back cells transmitted
Number of segment loop-back cells transmitted
Number of cells received from PXM
Number of cells received with CLP bit set
Number of AIS cells received
Number of FERF cells received
Number of BCM cells received
Number of end-end loop-back cells received
Number of segment loop-back cells received
Number of OAM cells discarded due to CRC-10 error

Table A-22 Diagnostic-Related Statistics

Diagnostic Statistic
Header of last cell with unknown LCN
Header of last received frame with unknown DLCI
ECN current queue depth

Table A-23 Troubleshooting-Related Statistics

Troubleshooting Statistic
ECN current queue depth, per channel

MGX-FRSM-8T1 Specification

This section provides information on the operation of the MGX-FRSM-8T1 card set. Topics are:

- General physical information about the card set. (See Table A-24.)
- System-level interface. (See Table A-25.)
- Information about the Frame Relay service. (See Table A-26.)

- Statistics and counters. (See Table A-27.)

Table A-24 General Card Specifications

Category	Description
Indicators per card	Active (Green), Standby (Yellow), Fail (Red)
Indicators per line	Active & Okay (Green) Active & Local Alarm (Red) Active & Remote Alarm (Yellow)
Line Interface connector	RJ-48 when used with RJ48-8T1 back card.
Line Rate	1.544 Mbps ± 50 bps
Line Framing	ESF per ATT TR 54016
Maintenance/Serviceability Features	Internal Problem Isolation Loopbacks Hot-pluggable cards
Reliability, MTBF	> 65000 hours
Card Size	MGX-FRSM-8T1: 7.25" x 16.25" LM-DB15-8T1: 7.0" x 4.5" Power: –48 VDC, 30W with 8 active T1 lines

Table A-25 System Interface

Category	Description
ATM Layer	Per CCITT I.361 and ATM UNI v3.1
AAL Layer	AAL5 per Draft CCITT I.363
FR-Cell Interworking	Per Draft CCITT I.555 and I.36x.1, as summarized in Frame Relay Forum, FR/ATM PVC Interworking Implementation Agreement FRF.5

Table A-26 Frame Relay Service With T1 Lines

Category	Description
Synchronization	Transmitter may be either loop-timed to receiver or synchronized to shelf (called normal mode)
Input Jitter Tolerance	Per ATT TR 62411
Output Jitter Generation	Per ATT TR 62411 using normal mode synchronization
Physical Layer Alarms	LOS, OOF, AIS, RAI
Number of Frame Relay Ports	One–a single Frame Relay stream occupying *N* consecutive time slots
Frame Relay Interface Rates	Either of the following: • 56 Kbps • *N* x 64 Kbps (where *N* is the number of consecutive time slots)
Frame Relay Interface	Per ANSI T1.618, 2-octet header

Table A-26 Frame Relay Service With T1 Lines (continued)

Category	Description
Frame Relay Performance Counters (per port; *N* x DS0):	Received frames discarded due to Aborts Received frames discarded due to illegal header (EA bit)(s) Received frames discarded due to CRC errors(s) Received frames discarded due to alignment errors(s) Received frames discarded due to unknown DLCI(s) Received frames discarded due to illegal frame length(s) Received frames discarded due to DE threshold exceeded Received frames with DE already set Received frames with FECN already set Received frames with BECN already set Received frames tagged FECN Received frames(s) Received bytes(s) Transmit frames discarded due to underrun Transmit frames discarded due to Abort Transmit frames discarded due to egress Q-depth exceeded(s) Transmit bytes discarded due to egress Q-depth exceeded(s) Transmit frames discarded due to egress DE threshold exceeded Transmit frames(s)
	Transmit bytes(s) Transmit Frames with FECN set(s) Transmit Frames with BECN set(s)
	LMI receive status inquiry request count(s) LMI transmit status inquiry request count LMI invalid receive status count(s) LMI signaling protocol (keep-alive time-out count)(s) LMI sequence number error count(s) LMI receive status transmit count (in response to request) LMI transmit status transmit count (in response to request) Transmit frames during LMI alarm(s) Transmit bytes during LMI alarm(s) LMI update status transmit count (in response to configuration changes)
Diagnostics (per port)	Last unknown DLCI received

Table A-27 List of Counters

Category	Description
Channels (end-points) per card	256, which you can allocate across any of the interfaces
Service Counters: (Note that an (s) at the end of the description means the data in the counter is usable as a statistic.)	Number of frames received(s) Number of bytes received(s) Number of frames received with DE already set(s) Number of bytes received with DE already set(s) Number of frames received with unknown DLCI Number of frames received but discarded(s) Number of received bytes discarded(s) Number of received bytes discarded due to exceeded Q-depth(s) Number of frames received and discarded due to: intershelf alarm exceeded DE threshold(s) exceeded Q depth(s) Number of frames received with FECN set Number of frames received with BECN set Number of frames received tagged FECN Number of frames received tagged BECN
	Number of frames transmitted(s) Number of bytes transmitted(s)
	Number of frames transmitted with DE set(s) Number of frames discarded due to reassembly errors(s) Number of frames transmitted during LMI logical port alarm(s) Number of frames transmitted with FECN set(s) Number of frames transmitted with BECN set(s) Number of transmit frames discarded(s) Number of transmit bytes discarded Number of transmit frames discarded due to: CRC error(s) egress Q depth exceeded(s) egress DE threshold exceeded source abort physical link failure (T1) ATM cells: Number of cells transmitted to PXM Number of cells transmitted with CLP bit set Number of OAM AIS cells transmitted(s) Number of OAM FERF cells transmitted(s) Number of BCM cells transmitted Number of OAM end-end loopback cells transmitted(s) Number of OAM segment loopback cells transmitted Number of cells received from PXM Number of cells received with CLP bit set Number of OAM AIS cells received(s) Number of OAM FERF cells received(s) Number of BCM cells received Number of OAM end-end loopback cells received(s) Number of OAM segment loopback cells received Number of OAM cells discarded due to CRC-10 error(s)

Table A-27 List of Counters (continued)

Category	Description
Statistics	If any of the counters in the preceding category of Service Counters includes an "(s)," you can configure it for statistics usage.
Diagnostics	Last unknown LCN received. Number of cells with unknown LCN.

MGX-FRSM-8E1 Specification

This section provides information on the operation of the MGX-FRSM-8E1 card set. Topics are:

- System-level interface. (See Table A-28.)
- General physical information about the card set. (See Table A-29.)
- Information about the Frame Relay service. (See Table A-30.)
- Statistics and counters. (See Table A-31.)

Table A-28 System Interface

Category	Description
ATM Layer	Per ITU-T I.361 and ATM UNI v3.1
AAL Layer	AAL5 per Draft CCITT I.363
FR-Cell Interworking	Per Draft CCITT I.555 and I.36x.1, as summarized in *Frame Relay Forum, FR/ATM PVC Interworking Implementation Agreement FERF.5*

Table A-29 General Card Specifications

Category	Description
Line Interface connector	RJ-48 when used with RJ-48-8E1 line module SMB when used with SMB-8E1 line module
Line Rate	2.048 Mbps ± 100 bps
Synchronization	Transmitter may be either loop-timed to receiver or synchronized to shelf (*normal* mode)
Input Jitter Tolerance	Per G.703
Output Jitter Generation	Per G.703
Physical Layer Alarms	LOS, OOF, AIS, RAI
Indicators per card	Active (Green), Standby (Yellow), Fail (Red)
Indicators per line	Active & Okay (Green) Active & Local Alarm (Red) Active & Remote Alarm (Yellow)
Maintenance/Serviceability Features	Internal Problem Isolation Loopbacks Hot-pluggable cards
Reliability, MTBF	> 65000 hours

Table A-29 General Card Specifications (continued)

Category	Description
Card Size	MGX-FRSM-8E1: 7.25" x 16.25" (18.43 cm x 41.28 cm) RJ48-8E1: 7.0" x 4.5" (17.78 cm x 11.43 cm) SMB-8E1: 7.0" x 4.5" (17.78 cm x 11.43 cm)
Power	–48 VDC, 30W with 8 active E1 lines

Table A-30 Frame Relay Service with E1 Lines

Category	Description
Number of Frame Interfaces	1–31 occupying *N*, where $1 < N < 31$. Sum of all < 31 for CCS or 1–30 for CAS.
Frame Relay Interface Rates	Either 56 Kbps or *N* x 64 Kbps, where *N* is the same as defined in the preceding item the preceding item “Number of Frame Interfaces.”
Ingress	8000-cell buffer shared between virtual channels/paths standard usage parameter control (UPC) Selective Cell Discard Virtual Circuit Queuing EFCI setting per VC
Egress	8000-cell storage capacity shared between four ports Up to 12 user-selectable egress queues per port Selective Cell Discard EFCI setting per Queue
Frame Relay Interface	Per ANSI T1.618, 2-octet header
Frame Relay Performance Counters (per Port; *n* x DS0)	Received frames discarded due to Aborts Received frames discarded due to illegal header (EA bit)(s) Received frames discarded due to CRC errors(s) Received frames discarded due to alignment errors(s) Received frames discarded due to unknown DLCI(s) Received frames discarded due to illegal frame length(s) Received frames discarded due to DE threshold exceeded Received frames with DE already set Received frames with FECN already set Received frames with BECN already set Received frames tagged FECN Received frames(s) Received bytes(s)

Table A-30 Frame Relay Service with E1 Lines (continued)

Category	Description
	Transmit frames discarded due to underrun Transmit frames discarded due to Abort Transmit frames discarded due to egress Q-depth exceeded(s) Transmit bytes discarded due to egress Q-depth exceeded(s) Transmit frames discarded due to egress DE threshold exceeded Transmit frames(s) Transmit bytes(s) Transmit frames with FECN set(s) Transmit frames with BECN set(s) LMI receive status inquiry request count(s) LMI transmit status inquiry request count LMI invalid receive status count(s) LMI signaling protocol (keep-alive time-out count)(s) LMI sequence number error count(s) LMI receive status transmit count (in response to request) LMI transmit status transmit count (in response to request) Transmit frames during LMI alarm(s) Transmit bytes during LMI alarm(s) LMI update status transmit count (in response to configuration changes)
Diagnostics (per port):	Last unknown DLCI that arrived

Table A-31 List of Counters

Category	Description
Channels (End-points)	256 per card—can be allocated across any of the Frame Relay interfaces
Counters	Service Counters: Number of frames received(s) Number of bytes received(s) Number of frames received with DE already set(s) Number of bytes received with DE already set(s) Number of frames received with unknown DLCI Number of frames received but discarded(s) Number of received bytes discarded(s) Number of received bytes discarded due to exceeded Q-Depth(s) Number of frames received and discarded due to: • intershelf alarm • exceeded DE threshold(s) • exceeded Q depth(s) Number of frames received with FECN set Number of frames received with BECN set

Table A-31 List of Counters (continued)

Category	Description
	Number of frames received tagged FECN Number of frames received tagged BECN Number of frames transmitted(s) Number of bytes transmitted(s) Number of frames transmitted with DE set(s) Number of frames discarded due to reassembly errors(s) Number of frames transmitted during LMI logical port alarm(s) Number of frames transmitted with FECN set(s) Number of frames transmitted with BECN set(s) Number of transmit frames discarded(s) Number of transmit bytes discarded Number of transmit frames discarded due to: CRC error(s) egress Q depth exceeded(s) egress DE threshold exceeded source abort physical link failure (T1)
	ATM cells: Number of cells transmitted to PXM Number of cells transmitted with CLP bit set Number of OAM AIS cells transmitted(s) Number of OAM FERF cells transmitted(s) Number of BCM cells transmitted Number of OAM end-end loopback cells transmitted(s) Number of OAM segment loopback cells transmitted Number of cells received from PXM Number of cells received with CLP bit set Number of OAM AIS cells received(s) Number of OAM FERF cells received(s) Number of BCM cells received Number of OAM end-end loopback cells received(s) Number of OAM segment loopback cells received Number of OAM cells discarded due to CRC-10 error(s) Statistics: All of the above counters followed by an(s) can be configured as statistics. Diagnostics: 8 Last unknown LCN received Cells with unknown LCN count Card General

MGX-SRM-3T3/B Specification

Specifications for the MGX-SRM-3T3/B appear in Table A-32.

Table A-32 MGX-SRM-3T3/B Specifications

Category	Description
Connectors	BNC-3T3, with three pairs of BNC connectors
T1/E1 Line Interface Connector on Service Modules	No connectors required for primary service module. If the MGX-SRM-3T3 provides 1:N redundancy, the standby service module requires a special back card: R-RJ48-8T1 or R-RJ48-8E1.
T1 Channel Rate	T1: 1.544 Mbps ±75 bps (50 ppm)
Transmit Clocking	Normal or looped clocking
Input Jitter Tolerance	Per AT&T Accunet T1.5 Service 1990-T1 Per G.703-E1
Physical Layer Alarms	Indicated in respective Service Modules
Physical Layer Performance Statistics	N/A
LED Indicators Per Card	Active (green), Failed (red), Standby (yellow)
BERT	Active (green), Errors (yellow)
1:N Redundancy	Active (green)
Indicator for each T3 lone	Active (green)
Maintenance/Serviceability Features	DS1 Loopback toward service modules Hot-pluggable
Reliability	>85000 hours MTBF
Card Size	Front card 7.25" (18.43 cm) x 16.25" (41.28 cm) Back card 7" (17.78 cm) x 4.5" (11.43 cm)
Power	48 VDC, 50 W
Loopback codes	Fractional T1 inband loopback: ANSI T1/E1-2/92-003 R3 DS0 loopback: TA-TSY-000055 TA-TSY-000057 TA-TSY-0000476
Monitoring trouble codes	TA-TSY-000077 TA-TSY-0000280 ATT TR-62310

Circuit Emulation Service for T3 and E3

The physical layer characteristics for the MGX-CESM-T3 and MGX-CESM-E3 are the same as the MGX-FRSM-T3 and MGX-FRSM-E3, respectively. For these characteristics, refer to Table A-14 and Table A-16. The available counters appear in the lists that follow. The categories are:

- T3 and E3 line framers
- AAL1 SAR
- Transmitted and received ATM cells

The counters for the T3 and E3 line framers are

- F-bit error count (T3)
- P-bit error Count (T3)
- CP-bit error Count
- FEBE Count
- BPV Count

The counters for AAL1 SARs are

- Number of OAM cells received
- Number of OAM cells dropped (FIFO full)
- Number of SN CRC's not correctable
- Number of cells with SN different than SN+1
- Number of cells received from UTOPIA interface
- Number of cells transmitted to UTOPIA interface
- Number of conditioned cells transmitted to UTOPIAinterface
- Number of cells not sent due to line resynchronization

The counters for transmitted ATM cells are

- Number of cells transmitted to PXM
- Number of cells discarded due to intershelf link alarm
- Number of cells transmitted with CLP bit set
- Number of AIS cells transmitted
- Number of FERF cells transmitted
- Number of BCM cells transmitted
- Number of end-end loop back cells transmitted
- Number of segment loop back cells transmitted

The counters for received ATM cells are:

- Number of cells received from PXM
- Number of cells received with CLP bit set
- Number of AIS cells received
- Number of FERF cells received
- Number of BCM cells received
- Number of end-end loop back cells received
- Number of segment loop back cells received
- Number of OAM cells discarded due to CRC-10 error

The diagnostics report the header of last cell with an unknown logical connection number LCN.

Circuit Emulation Service Module for T1 Operation

This section contains operational details for the MGX-CESM-8T1 and MGX-CESM-8E1.

Table A-33 CESM 8T1 Card Information

Category	Description
Back Card	RJ48-8T1
Line Rate	T1: 1.544 Mbps ±75 bps (50 ppm)
Transmit Clocking	Normal clock or SRTS generated
Line Coding	B8ZS AMI
Frame mode	SF ESF
Line alarms	Loss Or Signal (LOS) Loss Of Frame (LOF) Loss Of multiframe (LOMF) Remote loss of signal or frame (RAI) All ones received (AIS) Bi-polar violation
Alarm indication times	Near-end alarm up-count Near-end alarm down-count Near-end alarm maximum count Far-end alarm up-count Far-end alarm down-count Far-end alarm maximum count
Supported OAM cells	AIS FERF End-to-end loopback Segment loopback RTD loopback BCM
Physical Layer Performance Statistics	N/A
LED Indicators Per Card	Active (green), Failed (red), Standby (yellow)
BERT	T1 E1 1.2
1:N Redundancy	Active (green)
Indicator for each T1	Active (green)
Reliability, MTBF	
Card Size	Front card: 7.25" x 16.25" (18.43 cm x 41.28 cm) Back card: 7" x 4.5" (17.78 cm x 11.43 cm)
Power	48 VDC, 50W
Loopbacks	On or Off

Circuit Emulation Service Module for E1 Operation

This section contains operational details for the MGX-CESM-8E1.

Table A-34 CESM 8E1 Card Set Details

Category	Description
Back Card	RJ48-8E or SMB-8E1
Line Rate	E1: 2.048 Mbps ± 100 bps (50 ppm)
Transmit Clocking	Normal clock or SRTS generated
Line Coding	HDB3 AMI
Frame mode	single frame multiframe
Line alarms	Loss Or Signal (LOS) Loss Of Frame (LOF) Loss of multiframe (LOMF) Remote loss of signal or frame (RAI) All ones received (AIS) Bi-polar violation
Alarm indication times	Near-end alarm up-count Near-end alarm down-count Near-end alarm maximum count Far-end alarm up-count Far-end alarm down-count Far-end alarm maximum count
Supported OAM cells:	AIS FERF End-to-end loopback Segment loopback RTD loopback BCM
Physical Layer Performance Statistics	N/A
Indicators:	
Card-level	Active (green), Failed (red), Standby (yellow)
BERT	Active (green), Errors (yellow)
1 to N Redundancy	Active (green)
Indicator for each T1	Active (green)
Reliability, MTBF	
Card Size	Front card: 7.25" x 16.25" (18.43 cm x 41.28 cm) Back card: 7" x 4.5" (17.78 cm x 11.43 cm)
Power	48 VDC, 50W
Loopbacks	On or Off

Cabling Summary

Introduction

This appendix contains details on the MGX 8250 switch cabling.

Note In all cable references, the transmit direction is away from the switch, and the receive direction is toward the switch.

T3 Trunk Cabling

A trunk cable connects each T3 port on the BNC-2T3 back card to a T3 port on the co-located BPX 860 -series switch. Refer to Table B-1 and Table B-2 for details.

Table B-1 Trunk Cables

Cable Parameter	Description
Type	75 ohm coax cable (RG-59 B/U for short runs, AT&T 734A for longer runs). Two per T3 line (XMT and RCV).
Max. Length	450 feet max. between the BPX 8600 series switch and the MGX 8250 switch.
Connector	Terminated in male BNC; Rx is received from trunk, Tx is transmitted to trunk.

Table B-2 T3 Connector Pin Assignments

Connector	Description
Rx BNC	Receive T3 from trunk
Tx BNC	Transmit T3 to trunk

Frame Relay Cabling

This section describes the cabling and connector pinouts for the Frame Relay cards.

T1 Cabling

Trunk cables connect the customer DSX1 cross-connect point or T1 Channel Service Unit (CSU) to the switch at the T1 back card. Refer to Table B-3 and Table B-4 for details.

Table B-3 T1 Trunk/Circuit Line Cabling Specification

Cable Parameter	Description
Cable Type	Western Electric 22 AWG, ABAM individually shielded twisted pair (100 ohm balanced). Two pair per T1 line (1 transmit and 1 receive).
Cable Connector	Male DB-15 subminiature.
Max. Cable Length	533 ft. (162 m) maximum between the MGX 8250 switch and the first repeater or CSU. Selection of cable length equalizers.

Table B-4 T1 Connector Pin Assignments

Pin No.	Description
1	Transmit, Tip
2	Transmit Pair Shield
3	Receive, Tip
4	Receive Pair Shield
9	Transmit, Ring
11	Receive, Ring

Note Transmit direction is toward the T1 trunk.

E1 Cabling

BNC Connector

E1 trunk cables connect the customer DSX1 cross-connect point or E1 Channel Service Unit (CSU) to the switch at the FRSM E1 back card (BNC-8E1). Refer to Table B-5 and Table B-6.

Table B-5 E1 Trunk/Circuit Line Cabling Specification

Cable Parameter	Description
Cable Type: NC-8E1	75ohm coax cable for unbalanced connection. Two cables/pairs (1 transmit, 1 receive) per E1 line.
Cable Connector	Two female BNC for unbalanced connection; male DB-15 for balanced connection. Refer to Tables A-2 and A-3 for pinouts.
Max. Cable Length	Approximately 100 meters maximum between the MGX 8250 switch and the first repeater or CSU. Equalizer for cable length.

Table B-6 E1 Connector Pin Assignments (unbalanced)

Connector	Description
Rx BNC	Receive E1 from trunk
Tx BNC	Transmit E1 to trunk

DB-15 Connector

E1 trunk cables connect the customer DSX1 cross-connect point or E1 CSU to the switch at the FRSM E1 back card (DB15-8E1). Refer to Table B-7 and Table B-8.

Table B-7 E1 Trunk/Circuit Line Cabling Specification

Cable Parameter	Description
Cable Type: DB15-8E1	Western Electric 22 AWG, ABAM individually shielded twisted pair (120 ohm balanced). Two pair per T1 line (1 transmit and 1 receive).
Cable Connector:	Male DB-15 subminiature.
Max. Cable Length:	533 ft. (162 m) maximum between the MGX 8250 switch and the first repeater or CSU. Selection of cable length equalizers.

Table B-8 E1 Connector Pin Assignments

Pin No.	Description
1	Transmit, Tip
2	Transmit Pair Shield
3	Receive, Tip
4	Receive Pair Shield
9	Transmit, Ring
11	Receive, Ring

Note Transmit direction is toward the E1 trunk.

12IN1-S4 V.35/X.21 Back Card

The back card for the MGX-FRSM-HS1/B is the 12IN1-S4. Each port on the back card connects through a DTE version or DCE version of the Cisco 12IN1 cable. For the signals on the back card, see Table B-10 and Table B-11. The tables show the signal acronym, signal name, and signal source. The signal depends whether the back card connector is either DTE or DCE and whether the back card has been set as either X.21 or V.35 as shown in Table B-9. For the part numbers of the standard and non-standard versions of the 12IN1 cables, see Table B-12.

Table B-9 12IN1-S4 cable types

Cable Type	X.21	V.35
DCE	X.21 DCE	V.35 DCE
DTE	X.21 DTE	V.35 DTE

Note The cable type and part number are printed on a plastic band located near the smaller connector.

Table B-10 V.35 signals

Signal	Name	Source
RTS	Request to Send	DTE
DTR	Data Terminal Ready	DTE
CTS	Clear To Send	DCE
DSR	Data Set Ready	DCE
DCD	Data Carrier Detect	DCE
GND	Ground	both
B_LL	Local Loopback	DTE
GND	Ground	both
TxD+	Transmit Data	DTE
TxD–	Transmit Data	DTE
RxD+	Receive Data	DCE
RxD–	Receive Data	DCE
TXCE	Secondary Clear to Send	DTE
TXCE	Secondary Clear to Send	DTE
RxC+	Receive Clock	DCE
RxC–	Receive Clock	DCE
TxC+	Transmit Clock	DCE
TxC–	Transmit Clock	DCE

Table B-11 X.21 Signals

Signal	Name
Mode_2	Local Connections
Mode_DCE	Local Connections
Gournd	Shield Ground
O_TXD/RSC+	Transmit +
OTXD/RXD-	Transmit -

Table B-11 X.21 Signals (continued)

Signal	Name
O_RTS/CTS+	Control +
O_RTS/CTS-	Control -
I_RDX/TXD+	Receive +
I_RXD/TXD-	Receive -
ICTS/RTS+	Indication +
I_CTS/RTS-	Indication -
I_RXC/TXCE+	Timing +
I_RXC/TXCE-	Timing -
GND	CCT Ground

Table B-12 Cable Part Numbers for MGX-FRSM-HS1/BV

Type of Cable	Far End Connector	Part Number
X.21 DTE	male	72-1440-01
X.21 DCE	female	72-1427-01
V.35 DTE	male (standard)	72-1428-01
V.35 DTE	female (atypical)	72-1436-01
V.35 DCE	female (standard)	72-1429-01
V.35 DCE	male (atypical)	72-1437-01
V.35 DTE-DCE		72-1441-01
Straight-through		72-1478-01
Loopback plug		72-1479-01

HSSI Port Connectors

The High-Speed Serial Interface (HSSI) port connects through a female SCSI-II connector. This connector accords with ANSI/TIA/EIA-613. Refer to Table B-13 for the pinouts.

Table B-13 Pinouts for SCSI-II Connector

Pin No.	Name	Signal Function	Polarity	Signal Source
11	SD	Send Data	+	DTE
36			-	
4	RD	Receive Data	+	DCE
29			-	
6	ST	Send Timing	+	
31			-	
2	RT	Receive Timing	+	

Table B-13 Pinouts for SCSI-II Connector (continued)

Pin No.	Name	Signal Function	Polarity	Signal Source
27			_	
6	TT	Terminal Timing	+	DCE
13			-	
3	CA	DCE Available	+	DCE
28			-	
8	TA	DTE Available	+	DTE
33			-	
10	LA	Loop Ckt A	+	DTE
35			-	
12	LB	Loop Ckt B	+	DTE
37			-	
5	LC	Loop Ckt C	+	DCE
30			-	
1,26,7,32,13,38,19,44,25,50	SG	Signal Ground		

Cabling for RJ-48 Connectors on T1 and E1 Ports

For T1 and E1 ports that connect through a RJ-48 connector, each connector has:

- Transmit TIP pin
- Transmit RING pin
- Receive TIP pin
- Receive RING pin
- Two pins for shielded ground

An illustration of the connector wiring appears in Figure B-1.

Figure B-1 RJ-48 Connectors

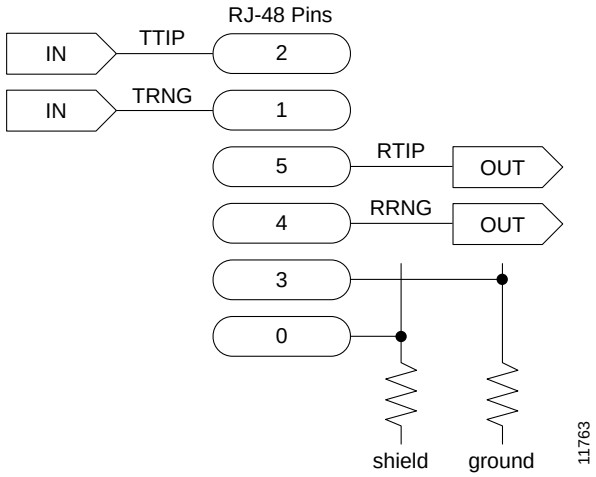

DC Power Cabling

DC Power connections are made to the DC Power Entry Modules at the rear of the MGX 8250 switch. (See Figure B-2.) See Table B-14 and Table B-15 for acceptable cable and wire types. Cisco normally does not provide wiring for DC-powered systems. See Table B-14 for details on DC wiring.

Table B-14 DC Power Wiring

Cable Parameter	Description
Wiring:	Three conductor, 6 AWG recommended wire gauge, min. 60 degrees Celsius insulation rating, copper conductors only. Panduit LC AS6-10-L terminal lug or equivalent to fit #10-32 screws.
Connection:	Panduit terminal lug (p/n LC AS6-10-L) or equivalent to fit #10-32 screws.

Figure B-2 DC Power Connections

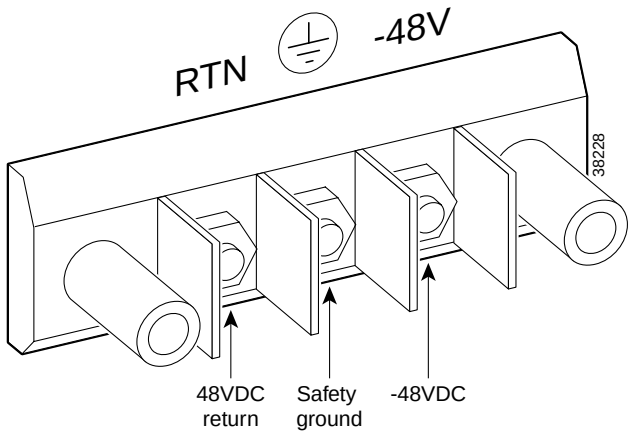

220VAC Power Cabling

Either Cisco Systems or the customer can provide the AC power cord. See Table B-15 for the power cords that Cisco can supply. In addition, you can special-order AC cables with other plugs or different lengths. If you want to construct the power cord, it must mate with an IEC320 16/20A male receptacle on the back of the AC power module.

Table B-15 220VAC Power Cables

Cable Parameter	Description
Cable	Provided with 8 feet (2.3 m) of 3-conductor wire with plug
Plug: customer end	20 A NEMA L620, 3-prong plug (domestic U.S.) 13 A 250 Vac BS1363, 3-prong fused plug (U.K., Ireland) CEE 7/7 (Continental Europe) AS3112 (Australia/New Zealand) CEI23-16/VII (Italy)

110VAC Power Cabling

Either Cisco Systems or the customer can provide the AC power cord. See Table B-16 for the power cords that Cisco can supply. In addition, you can special-order AC cables with other plugs or different lengths. If you want to construct the power cord, it must mate with an IEC320 (C-14) 10/15A male receptacle on the back of the AC power module.

Table B-16 110VAC Power Cables

Cable Parameter	Description
Cable	Provided with 8 feet (2.3 m) of 3-conductor wire with plug.
Plug (customer end)	20 A NEMA L620, 3-prong plug (domestic U.S.) Need 15A NEMA 5-15 for US and Canada. 13 A 250 Vac BS1363, 3-prong fused plug (UK, Ireland) CEE 7/7 (Continental Europe) AS3112 (Australia/New Zealand) CEI23-16/VII (Italy) 125V/15A North America

Control and Clock Cabling

This section describes the cables that can connect to the PXM-UI card.

Maintenance and Control Ports

The Maintenance (or Modem) port and the Control (or Console) port connect a switch to an ASCII terminal, workstation, or modem for remote alarm reporting or system monitoring. Refer to Table B-17 for a description of the cabling and Table B-18 for the pinout of the associated RJ-48 connector.

Table B-17 Maintenance and Control Port Cabling

Cable Parameter	Description
Interface	EIA/TIA-232—both are DTE ports.
Suggested Cable	24 AWG, 25-wire. A straight-through EIA/TIA-232 cable provides a terminal or printer connection. For an interface with modems on either port, a null modem cable may be necessary.
Cable Connector	RJ-48, subminiature, male. Table B-18 contains a list of the port pin assignments.
Max. Cable Length	50 feet (15 m)

Table B-18 Maintenance and Control Port Pin Assignments

Pin No.	Name	Description
1	RTS out	Request to Send
2	DTR out	Data Terminal Ready
3	TxD	Transmit Data
4	GND	Chassis ground
5	GND	Chassis ground
6	RxD	Receive Data
7	DSR	Data Set Ready
8	CTS	Clear to Send

Modem Cable

Figure B-3 shows a modem cable that is used for connecting modems to the MGX 8250 control and maintenance ports.

Figure B-3 Null Modem Cable

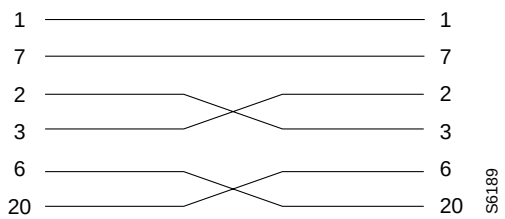

External Clock Input Cabling

The external clock input cable connects the external clock inputs through the T3E3-D, T3E3-B and SMF-155 EXT.TMG. connectors. The clock may be 1.544 Mbps for T3E3-D or 2.048 Mbps for T3E3-D. See Table B-19 through Table B-22.

T1/E1 Clock Cabling

The DB-15 clock port can accept a T1 or E1 BITS clock input.

Table B-19 External Clock Cabling—T3E3-D or SMF-155

Cable Parameter	Description
Cable Type	Western Electric 22 AWG, ABAM individually shielded twisted pair (100 ohm balanced). One pair per T1 line (1 receive).
Cable Connector	Male DB-15 subminiature. Refer to Table B-20 for pinouts.
Max. Cable Length	533 ft. (162 m) maximum between the MGX 8250 switch and the first repeater or CSU. Selection of cable length equalizers is used. Wire build-out is required.

Table B-20 T1 Connector Pin Assignments for EXT.TMG

Pin No.	Description
1	
2	Transmit Pair Shield
3	Receive, Tip
4	Receive Pair Shield
9	
11	Receive, Ring

E1 Clock Cabling

Table B-21 E1 Clock Cabling—T3E3-B

Cable Parameter	Description
Cable Type	75ohm coax cable for unbalanced connection. One cable pair per E1 clock input.
Cable Connector	One female BNC for unbalanced connection; male DB-15 for balanced connection.
Max. Cable Length	Approximately 100 meters maximum between the MGX 8250 switch and the first repeater or CSU. Equalizer for cable length.

Table B-22 E1 Connector Pin Assignments for EXT.TMG (unbalanced)

Connector	Description
Rx BNC	Receive E1 from trunk

External Alarm Cabling

The external alarm cable connects to the alarm connector on the PXM-UI card. See Table B-23 for physical characteristics of the cable and Table B-24 for the pinouts.

Table B-23 External Alarm Cabling

Cable Parameter	Description
Interface	Dry-contact relay closure.
Wire	24 AWG, shielded, 6-pair.
Connector	DB-15, subminiature, male.

Table B-24 Network Alarm Pin Assignments

Pin No.	Alarm	Description
1	Audible—Major	Normally open
2		Common
9		Normally closed
4	Visual—Major	Normally open
5		Common
12		Normally closed
7	unused	n.c.
8	unused	n.c.
3	Audible—Minor	Normally open
11		Common
10		Normally closed
6	Visual—Minor	Normally open
14		Common
13		Normally closed
15	unused	n.c.

Standard MGX 8250 Cables

For a list of the standard cables that Cisco can supply for the MGX 8250 switch, see Table B-25. The suffix to the model number indicates the length of the cable. For example, 5610-50 indicates a 50-foot cable. Cables are available in standard lengths of 10 ft. (3 m), 25 ft. (7.6 m), 50 ft. (15 m), 75 ft. (22.8 m), and 100 ft. (30 m). Lengths of 100 ft. (30 m) to 600 ft. (183 m) are available through a special order.

Where applicable, Table B-25 includes the gender of the connector and the number of pins. For example, EIA/TIA-232/M25-M25 indicates a cable terminated with a male DB-25 at both ends.

Table B-25 Standard Cables Available from Cisco

Model Number	Description	Usage
T3-E3-10 T3-E3-25 T3-E3-50 T3-E3-75 T3-E3-xx	75 Ω coax/BNC-BNC, 10' 25' 50' 75' length to be specified	T3 or E3 trunk interface
5620	EIA/TIA-232/M25-F25	PXM-UI maintenance port to control terminal, WAN Manager, or external window device
5621	EIA/TIA-232/M25-M25 special	Control or maintenance port to modem
5601	Ground cable	DC power
5670	Molex-pigtail	DC power
5671	Spade lug-pigtail	DC power

Redundancy Y-Cable

Special Y-cables provide line redundancy where applicable. (The Service Resource Module can also provide redundancy where certain Y-cables do not apply.) Table B-26 lists the Y-cables used with various MGX 8250 cards.

Table B-26 Y-Cable Product Names for Applicable Cards

Applicable Card Name	Connector Hardware	Type/Standard Interface	Product Number
PXM-UI	RJ-45	EIA/TIA-232	CAB-5684-06 (6-inch Y)
PXM-UI	RJ-45	EIA/TIA-232	CAB-5684-18
PXM-UI	RJ-45	T1 BITS Clock	CAB-5686-06 (6-inch Y)
PXM-UI	SMB	E1 BITS Clock	CAB-5681-06 (6-inch Y)
PXM-UI	SMB	E1 BITS Clock	CAB-5681-18 (18-inch Y)
PXM-UI	DB-15	Alarm Output	CAB-5607-10 (10-inch Y)
PXM-4-155	SC	SMF, MMF	CAB-SMF-Y-SC
PXM-1-622	SC	SMF	CAB-SMF-Y-SC
PXM-2T3E3	BNC	75 ohm, coaxial	CAB-T3E3-Y
MGX-BNC-3T3-M	BNC	75 ohm, coaxial	CAB-T3E3-Y
MGX-FRSM-2T3E3	BNC	75 ohm, coaxial	CAB-T3E3-Y
MGX-CESM-T3E3	BNC	75 ohm, coaxial	CAB-T3E3-Y
MGX-FRSM-HS2	SCSI2		CAB-SCSI2-Y
SMSCFC010250-01M	SC to FC		72-1246-01

APPENDIX C

Commands That Apply to the MGX 8250 Switch

This appendix contains descriptions of the switch software commands that have been altered to support the MGX 8250 switch. These descriptions appear in the *Cisco WAN Switching Command Reference.*

addcon (ATM)

Establishes an ATM connection between the current switch and one or more switches in the network.

The **addcon** command for ATM adds any one of the following types of ATM connections:

- Constant Bit Rate (CBR)
- Variable Bit Rate (VBR)
- Frame Relay-to-ATM interworking connection (ATFR)
- Frame Relay-to-ATM interworking with ForeSight (ATFST) connection
- Available Bit Rate according to ATM Forum standards (ABRSTD)
- Available Bit Rate with ForeSight (ABRFST)
- Unspecified Bit Rate (UBR)

This description has the following explanations in the form of figures and tables

- Flow diagrams showing the sequence of parameter prompts for each connection type
  - Figure C-1 shows the prompt sequence for CBR connections.
  - Figure C-2 shows the prompt sequence for VBR connections.
  - Figure C-3 shows the prompt sequence for ATFR connections.
  - Figure C-4 shows the prompt sequence for ATFST connections
  - Figure C-5 shows the prompt sequence for ABRSTD connections.
  - Figure C-6 shows the prompt sequence for ABRFST connections.
  - Figure C-7 shows the prompt sequence for UBR connections.
- A table that names each type of policing
- A table showing each connection parameter, possible values, and defaults
- A table with a brief definition of each connection parameter
- Example screens from the command line interface (CLI)

For detailed descriptions of the connection types, traffic classes, policing, and ATM-related topics, refer to the *Cisco BPX 8600 Series Reference*, the *Cisco WAN Switching System Overview*, and the ATM Forum specifications.

The switch on which **addcon** executes is the "owner" of the connection. Connection ownership is important because automatic rerouting and preferred routing information is entered on the node that owns the connection. See the **cnfpref** and **cnfcos** descriptions for details on automatic rerouting.

The parameter prompts depend on the connection type. The figures on this and the following pages are flow diagrams showing the sequence of possible parameter prompts according to the connection type. The flow diagrams begin at the point after you have entered the remote node name and VPI and VCI (which are common parameters). The subsequent tables define the parameters and list the defaults and ranges for each parameter.

A form of notation appears for some parameters that may need explanation. The notation is either (0), (1), or (0+1). This refers to the state of the Cell Loss Priority (CLP) bit. The usage of the CLP bit is in the traffic policing schemes. (0+1) means cells with CLP=0 or 1. A (0) means cells with CLP=0. (1) means cells with CLP=1. The CLP bit is used in different contexts. For example, CDVT (0+1) refers to Cell Delay Variation Tolerance (CDVT) for cells with CLP=0 or 1.

Before a connection is added, the proposed connection appears on the screen with a prompt for confirmation. After **addcon** executes, the system software automatically routes the connection.

Figure C-1 Prompt Sequence for a CBR Connection

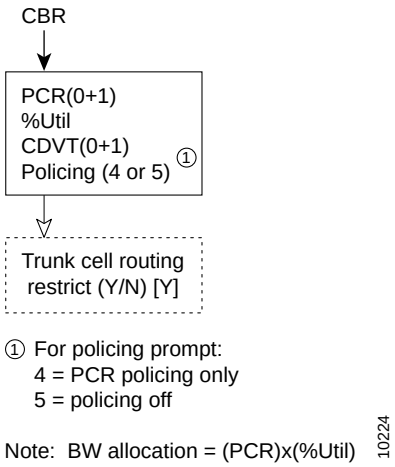

Figure C-2 Prompt Sequence for a VBR Connection

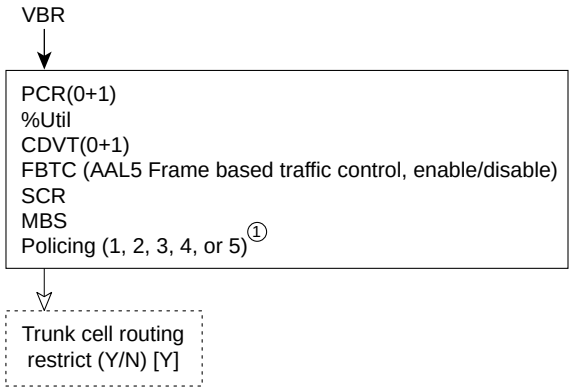

① For policing prompt:
1 = VBR.1
2 = VBR.2
3 = VBR.3
4 = PCR policing only
5 = policing off

Note: BW allocation = (PCR)x(%Util)

10225

Figure C-3 Prompt Sequence for an ATFR Connection

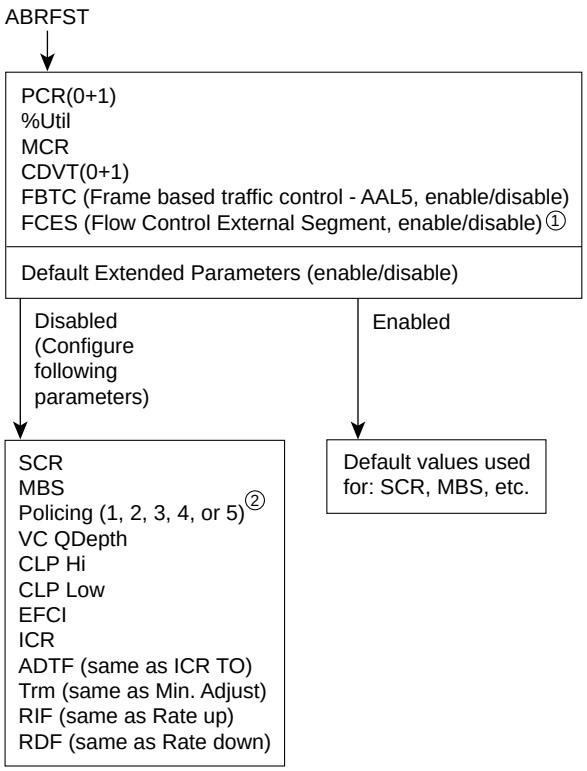

① At present, FCES is not available for ABR with ForeSight

② For policing prompt:
1 = VBR.1
2 = VBR.2
3 = VBR.3
4 = PCR policing only
5 = policing off

Note: Bandwidth allocation
= (MCR)x(%Util)

S6163

Figure C-4 Prompt Sequence for a ATFST Connection

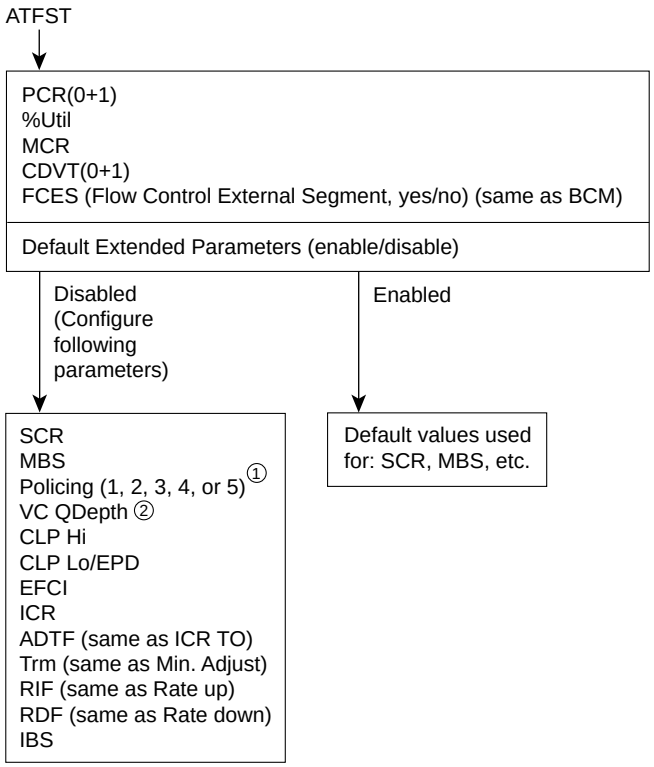

① For policing prompt:
1 = VBR.1
2 = VBR.2
3 = VBR.3
4 = PCR policing only
5 = policing off

② VC QDepth maps to VC Queue max for frame relay.
EFCI maps to ECN for frame relay.
IBS maps to C max for frame relay.

Note: FBTC (Frame based traffic control - AAL5, same as FGCRA) is automatically set to yes.

S6164

Figure C-5 Prompt Sequence for an ABRSTD Connection

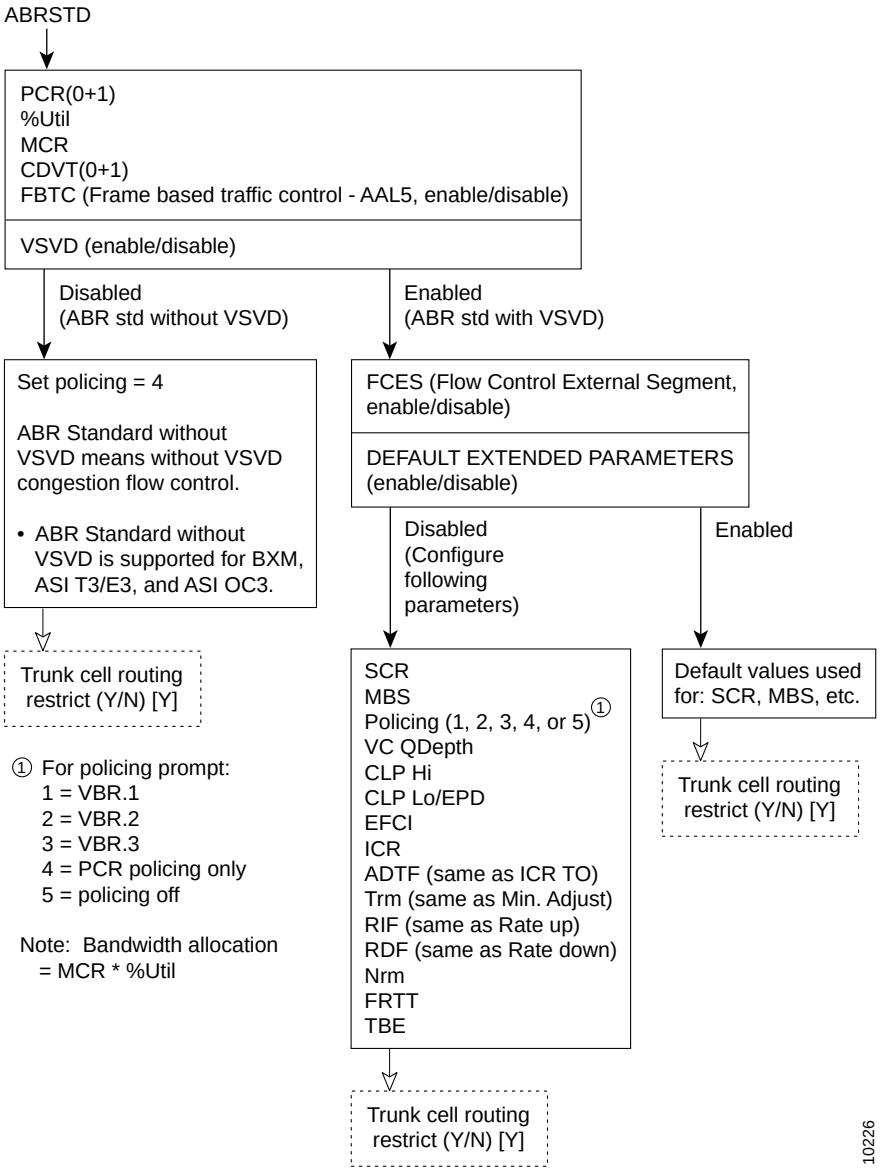

Figure C-6 Prompt Sequence for ABRFST Connection

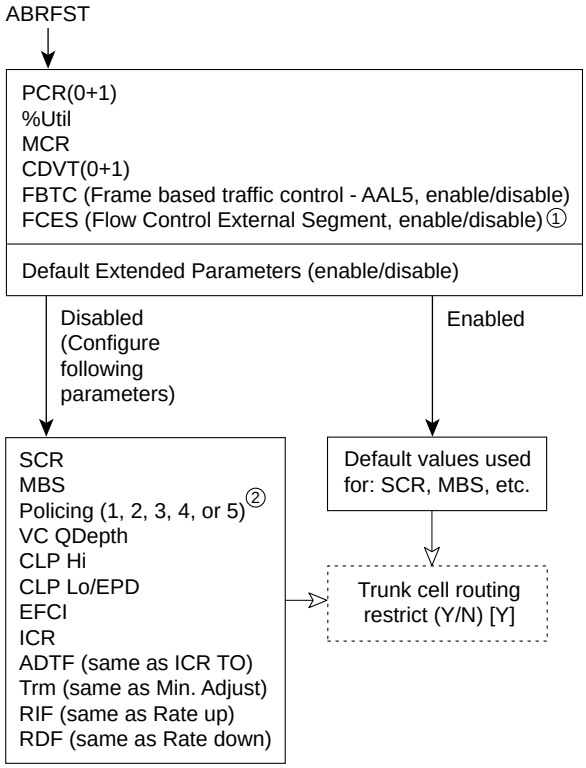

① At present, FCES is not available for ABR with ForeSight

② For policing prompt:
1 = VBR.1
2 = VBR.2
3 = VBR.3
4 = PCR policing only
5 = policing off

Note: Bandwidth allocation
= (MCR)x(%Util)

10227

Figure C-7 Prompt Sequence for a UBR Connection

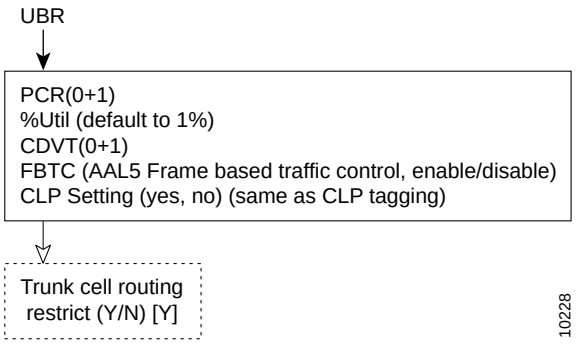

10228

Table C-1 contains descriptions of the ATM parameters that appear on screen. Table C-2 gives the defaults, ranges (or values), and applicable connection type (marked with an X) for each parameter. Table C-3 gives a shorthand definition of each type of traffic policing. In Table C-3, note that VBR.1, VBR.2, VBR.3, CBR.1, UBR.1, and UBR.2 are ATM Forum standards for traffic policing. The columns in Table C-3 indicate the actions involved with each policing type. For descriptions of the *traffic types*, *connection types*, and *traffic policing*, refer to the *Cisco BPX 8600 Series Reference* and the *Cisco WAN Switching System Overview.* The preceding flow diagrams help clarify the information in the forthcoming tables. The remaining parts of this description contain attributes and screen examples.

Note If the description states the parameter is transmit/receive, the system is prompting for two values: one is for the transmit direction, the other for the receive direction. Also, not all parameters apply to OC-3/STM1 or OC-12/STM4, as the text shows.

Table C-1 addcon–Parameters

Parameter/Prompt	Description
local channel	Specifies the local slot, port, virtual path identifier (VPI), and virtual connection identifier (VCI) for the connection. The format is *slot.port.vpi.vci.* The VPI range for a UNI connection is 0–255. The VPI range for an NNI connection is 1–4095. The range for a VCI is 1–65355. The VCI can be an asterisk (*) to indicate the connection is a *virtual path connection* (so the VCI has no meaning within the network). When adding an MGX 8250 interface shelf with a UNI interface to a BPX 8600 series routing node, the VPI range is 1–255. The VCI range is 1–65535. When adding an MGX 8250 interface shelf with an NNI interface to a BPX 8600 series routing node, the VPI range is 1–4095. The VCI range is 1–65535.
remote node name	Specifies the name of the node at the other (or remote) end of the connection.
remote channel	Specifies the remote node's slot, port, VPI, and VCI for this connection. The format is *slot.port.vpi.vci*. The VPI and VCI ranges are: The VPI range for a UNI connection is 0–255. The VPI range for an NNI connection is 0–1023 The range for a VCI is 1–4095. The VCI can be an asterisk (*) to indicate the connection is a *virtual path* (the VCI does not provide a distinction within the network).

Table C-1 addcon–Parameters (continued)

Parameter/Prompt	Description
connection class	Specifies one of the following connection types: VBR, UBR, CBR, ATFST, ATFR, ATFX, ATFT, ABRSTD, or ABRFST. The subsequent displayed parameters depend on the connection type you choose. To see the parameters associated with each connection type, refer to the appropriate flow diagrams (Figure C-1 through Figure C-7). For a definition of each class, refer to the *Cisco WAN Switching System Overview*. The option for choosing a class *number* is also available. The class is a *template* for a connection type. The class serves as an alternative to specifying each parameter for a connection type. To specify a connection class, enter a digit in the range 1–10. To see the parameter values for a class, use the **dspcls** commands. To customize any class template, use **cnfcls**.
PCR	Peak Cell Rate: the cell rate that the source cannot exceed.
%Util	Specifies the percentage of bandwidth utilization.
MCR	Minimum Cell Rate: the committed, minimum cell rate for a connection in a network.
CDVT	Cell Delay Variation Tolerance: controls time scale over which the PCR is policed.
FBTC (AAL5 Frame Base Traffic Control)	Enables the possibility of discarding a whole frame rather than a single, non-compliant cell. FBTC used to set the Early Packet Discard bit at every node along a connection.
VSVD	Virtual Source Virtual Destination.
Flow Control External Segments	Enables Cisco WAN switches to perform flow control on external segments (on the CPE, for example) in addition to the Cisco WAN Switching segments.
SCR	Sustainable Cell Rate: the long-term limit on the rate that a connection can sustain.
MBS	Maximum Burst Size: the maximum number of cells that can burst at the PCR and still be compliant. MBS is used to determine the Burst Tolerance (BT), which controls the time period over which the SCR is policed.
Policing	(see Table C-3, “Traffic Policing Definitions”).
VC QDepth	The depth of the queue VC QDepth.
CLP Hi	Cell Loss Priority Hi threshold (% of VC QDepth). When the high threshold is exceeded, the node discards cells with CLP=1 until the number of cells in the queue drops below the level specified by CLP Lo/EPD.

Table C-1 addcon–Parameters (continued)

Parameter/Prompt	Description
CLP Lo/EPD	Cell Loss Priority Low threshold (% of VC QDepth)/Early Packet Discard. When the number of cells in the queue drops below the level specified by CLP Lo/EPD, the node stops discarding cells with CLP=1. If the card is a BXM and AAL5 FBTC=yes, the percent of VC QMax equals the value of EPD. Frame-based Traffic Control (FBTC) is FGCRA for AAL5. For an ASI card, the percent of VC QMax is CLP Lo regardless of the FBTC setting.
EFCI	Explicit Forward Congestion Indication threshold (% of VC QDepth).
ICR	Initial Cell Rate: the rate at which a source initially transmits after an idle period.
IBR	Initial Burst Size: the maximum burst size a source can initially transmit after an idle period. IBR applies to only BXM cards.
ADTF (ATM Forum TM 4.0 term)	The Allowed-Cell-Rate Decrease Factor: time permitted between sending RM cells before the rate is decreased to ICR. (In previous software releases, ADTF was ICR TO—Initial Cell Rate Time Out.)
Trm (ATM Forum TM 4.0 term)	An upper boundary on the time between forward RM cells for an active source: an RM cell must be sent at least every *Trm* milliseconds. (In previous software releases, Trm was Min. Adjust.)
RIF (ATM Forum TM 4.0 term)	Rate Increase Factor: controls the amount by which the cell transmission rate may increase upon receipt of an RM cell. (In previous software releases, RIF was Rate Up.)
RDF (ATM Forum TM 4.0 term)	Rate Decrease Factor: controls the amount decrease in cell transmission rate when an RM cell arrives. (In previous software releases, RDF was Rate Down.)
Nrm (ATM Forum TM 4.0 term)	Nrm.: maximum number of cells a source may send for each forward RM cell; an RM cell must be sent for every *Nrm*–1 data cells.
FRTT (ATM Forum TM 4.0 term)	Fixed Round-Trip Time: the sum of the fixed and propagation delays from the source to a destination and back.
TBE (ATM Forum TM 4.0 term)	Transient Buffer Exposure: the negotiated number of cells that the network would like to limit the source to sending during start-up periods, before the first RM-cell returns.
PCR	Peak cell rate: the cell rate that the source may never exceed.

Table C-2 addcon–Parameter Defaults and Ranges

Parameter with [Default Settings]	UXM and BXM T1/E1, T3/E3, OC-3, and OC-12 Range	ASI Range
PCR(0+1)[50/50]	50–max. T1/E1 cells/sec. 50–max. T3/E3 cells/sec. 50–max. OC-3 cells/sec 50–max. OC-12 cells/sec	T3: MCR–96000 E3: MCR–80000 OC-3 (STM1): 0–353200 Limited to MCR–5333 cells/sec for ATFR connections.
%Util [100/100] for UBR [1/1]	0–100%	1–100%
MCR [50/50]	cells/sec 6–max. of T3/E3/OC-3/OC-12	T3: 0–96000 cells/sec E3: 0–80000 cells/sec
AAL5 Frame Base Traffic Control: for VBR [disable] for ABR/UBR [enable] for Path connection [disable]	enable/disable	enable/disable
CDVT(0+1): for CBR [10000/10000], others [250000/250000]	0–5,000,000 microseconds	T3/E3: 1–250,000 microseconds. OC-3/STM1: 0–10000 microseconds.
ForeSight [disable]	0 = disable 1 = enable	0 = disable 1 = enable
VSVD [disable]	enable/disable	enable/disable
Flow Control External Segment [disable]	enable/disable	enable/disable
Default Extended Parameters [enable]	enable/disable	enable/disable
CLP Setting [enable]	enable/disable	enable/disable
SCR [50/50]	c50–max. T1/E1 cells/sec 50–max. T3/E3 cells/sec 50–max. OC-3 cells/sec 50–max. OC-12 cells/sec	T3: MCR–96000:T3 E3: MCR–80000: E3 OC-3/STM1: 0–353200 Limited to MCR–5333 cells/sec for ATFR connections.
MBS [1000/1000]	1-5,000,000 cells	T3/E3: 1–24000 cells OC-3 (STM1): 10–1000 cells

Table C-2 addcon–Parameter Defaults and Ranges (continued)

Parameter with [Default Settings]	UXM and BXM T1/E1, T3/E3, OC-3, and OC-12 Range	ASI Range
Policing [3] For CBR: [4]	1 = VBR.1 2 = VBR.2 3 = VBR.3 4 = PCR policing only 5 = off	1 = VBR.1 2 = VBR.2 3 = VBR.3 4 = PCR policing only 5 = off
ICR: max [MCR, PCR/10]	MCR-PCR cells/sec	MCR-PCR cells/sec
ADTF [1000]	62–8000 msecs	1000–255000 msecs
Trm [100]	ABRSTD: 1–100 msec. ABRFST: 3–255 msecs	20–250 msecs
VC QDepth [16000/16000] For ATFR/ATFST [1366/1366]	0–61440 cells	Applies to T3/E3 only ABR: 1–64000 cells ATFR: 1–1366 cells
CLP Hi [80/80]	1–100%	1–100%
CLP Lo/EPD [35/35]	1–100%	1–100%
EFCI [30/30] For ATFR/ATFST [100/100]	1–100%	1–100%
RIF: For ForeSight: = max [PCR/128, 10] For ABRSTD [128]	If foreSight, then in absolute (0–PCR) If ABR, then 2^n (1–32768)	If ForeSight, then in absolute (0–PCR) If ABR, then 2^n (1–32768)
RDF: For ForeSight [93] For ABRSTD [16]	IF ForeSight, then % (0%–100%) If ABR, then 2^n (1–32768)	IF ForeSight, then % (0%–100%) If ABR, then 2^n (1–32768)
Nrm[32]–BXM only	2–256 cells	not applicable
FRTT[0]–BXM only	0–16700 msec	not applicable
TBE[1,048,320]–BXM only	0–1,048,320 cells (different maximum range from TM spec. but limited by firmware for CRM (4095 only) where CRM=TBE/Nrm	not applicable

Table C-2 addcon–Parameter Defaults and Ranges (continued)

Parameter with [Default Settings]	UXM and BXM T1/E1, T3/E3, OC-3, and OC-12 Range	ASI Range
IBS [0/0]	0–24000 cells	T3/E3 ABR: 0–24000 cells ATFR: 1–107 cells OC3: 0–999 cells
Trunk Cell Routing Restriction (y/n) [y]	yes or no	yes or no

Table C-3 Traffic Policing Definitions

Connection Type	ATM Forum TM spec. 4.0 conformance definition	PCR Flow (1st leaky bucket)	CLP tagging (for PCR flow)	SCR Flow (2nd leaky bucket)	CLP tagging (for SCR flow)
CBR	CBR.1 when policing set to 4 (PCR Policing only)	CLP(0+1)	no	off	n/a
CBR	When policing = 5 (off)	off	n/a	off	n/a
UBR	UBR.1 when CLP setting = no	CLP(0+1)	no	off	n/a
UBR	UBR.2 when CLP setting = yes	CLP(0+1)	no	CLP(0)	yes
VBR, ATFR, ATFST, ABRSTD with VSVD, and ABRFST	VBR.1 when policing = 1	CLP(0+1)	no	CLP(0+1)	no
VBR, ATFR, ATFST, ABRSTD with VSVD, and ABRFST	VBR.2 when policing = 2	CLP(0+1)	no	CLP(0)	no
VBR, ATFR, ATFST, ABRSTD with VSVD, and ABRFST	VBR.3 when policing = 3	CLP(0+1)	no	CLP(0)	yes
VBR, ATFR, ATFST, ABRFST	(when Policing = 4)	CLP(0+1)	no	off	n/a
VBR, ATFR, ATFST, and ABRSTD with VSVD	(when Policing = off)	off	n/a	off	n/a

Full Name

Add Connection

addcon *parameters* (see preceding flow diagrams and tables)

Related Commands

delcon, dspcons

Attributes

Privilege	1–2
Jobs	Yes
Log	Yes
Node	IGX, BPX
Lock	Yes

Example 1

```
addcon 9.1.100.100 pubsbpx2 9.1.102.102
```

Description

Add a standard ABR connection with VSVD and no Default Extended Parameters (which then require user input for SCR, MBS, and so on).

System Response

```
pubsbpx1       TN    SuperUser       BPX 15    9.19.1 Oct. 27 1998 05:22 GMT

 From            Remote      Remote                              Route
 9.1.100.100     NodeName    Channel         State  Type         Avoid COS O
 9.1.100.100     pubsbpx2 9.1.102.102     Ok     abrstd
 9.1.102.102     pubsbpx2 9.1.100.100     Ok     abrstd




This Command: addcon 9.1.100.100 pubsbpx2 9.1.102.102 abr * * * * e e * d * * 1
* * * * * * * * *

Add these connections (y/n)?
```

addshelf

Adds an ATM link between a hub node and a concentrator such as an MGX 8220, MGX 8250, or IGX 8400-series shelf in a tiered network; an ATM link between a BXM card on a BPX 8600 series node and a label switching controller (LSC) such as a series 7200 or 7500 router; or an ATM link between a BXM card on a BPX 8600 series node and an Extended Services Processor. A label switching (LSC) or an Extended Services Processor is considered an interface shelf from the BPX 8600 perspective. The routing hub can be either a BPX 8600 series or an IGX 8400-series node.

The interface shelf can be one of the following:

- An MGX 8220 shelf connected to a BPX 8600 series node
- An MGX 8250 shelf connected to a BPX 8600 series node
- An IGX node connected to an IGX routing node that serves as a hub for the IGX/AF
- A Label Switching Controller (LSC) connected to a BPX 8600 series node
- An Extended Services Processor Controller connected to a BPX 8600 series node

The signalling protocol that applies to the trunk on an interface shelf is Annex G.

Note Because tiered network capability is a paid option, personnel in the Cisco Technical Assistance Center (TAC) must telnet to the unit and configure it as an interface shelf before you can execute **addshelf**.

Each IGX/AF, MGX 8220, or MGX 8250 shelf has one trunk that connects to the BPX 8600 series or IGX 8400-series node serving as an access hub. A BPX 8600 series routing hub can support up to 16 T3 trunks to the interface shelves, which can be an IGX/AF, MGX 8220, or MGX 8250 interface shelf. An IGX hub can support up to four trunks to the interface shelves, which can be IGX/AF shelves only.

Before it can carry traffic, the trunk on an interface shelf must be “upped” (using **uptrk**) on both the interface shelf and the hub node and “added” to the network (using **addshelf**). Also, a trunk must be free of major alarms before you can add it with the **addshelf** command.

Full Name

Add Interface Shelf (Feeder)

Syntax

Interface shelf:

addshelf <slot.port> <shelf-type> <vpi> <vci>

LSC:

addshelf <slot.port> <device-type> <control partition> <control ID>

Note If you manage a tiered network through the command line interface, you can manage only Frame Relay interworking connections (ATFR) across the network. Three-segment connections for carrying serial data or voice between IGX/AFs is allowed, but you must manage them through the Cisco WAN Manager application.

Related Commands

delshelf, **dspnode**, **dsptrks**

Attributes

Privilege	1–4
Jobs	Yes
Log	Yes
Node	BPX 8600 series switch with IGX and IPX interface shelves; IGX switch with IPX and IGX shelves BPX 8600 series switch with the MGX 8220 shelf BPX 8600 series switch with the MGX 8250 shelf BPX 8600 series switch for label switching controller (LSC) BPX 8600 series switch for Extended Services Processor
Lock	Yes

Example 1

Interface shelf: **addshelf** 11.1 a 21 200

LSC: **addshelf** 4.1 vsi 1 1

Description

Interface shelf:

Add trunk 11.1 as an MGX 8220 interface shelf. After you add the shelf, the screen displays a confirmation message and the name of the shelf.

LSC:

Add trunk 4.1 as a VSI-LSC interface shelf. After you add the LSC, the screen displays a confirmation message and the name of the shelf.

Description for Label Switching

For label switching, before it can carry traffic, you need to "up" the link to a label switch controller (using either **uptrk** or **upport**) at the BPX 8600 series node. You can then add the link to the network (using **addshelf**). Also, the link must be free of major alarms before you can add it with the **addshelf** command. (See Table C-4.)

Note Once you up a port on the BXM in either trunk or port mode by using either the **uptrk** or **upport** commands, respectively, you can only up the ports in the same mode.

Table C-4 Addshelf–Label Switching Parameters

Parameter	Description
slot.port	Specifies the BXM slot and port number of the trunk. (You can configure the port for either trunk (network) or port (service) mode.
device-type	vsi, which is virtual switch interface, specifies a virtual interface to a label switch controller (LSC) such as a Cisco 7200 or 7500 series router.
control partition	
control ID	Control IDs must be in the range of 1 to 32, and you must set these identically on the LSC and in the **addshelf** command. A control ID of 1 is the default used by the label switch controller (LSC).

Example for Label Switching

Add a label switch controller link to a BPX 8600 series node by entering the **addshelf** command at the desired BXM port as follows:

addshelf 4.1 vsi 1 1

System Response

```
nmsbpx23       TN    SuperUser       BPX 15    9.1   Apr. 4 1998 13:28 PST

                        BPX Interface Shelf Information

Trunk    Name      Type      Alarm
 5.1     j6c       AXIS      MIN
 5.3     j5c       IGX/AF    MIN
 4.1     VSI       VSI       OK




This Command: addshelf 4.1 v 1 1

Next Command:
```

Description for Interface Shelves

An interface shelf can be one of the following:

- An MGX 8220 connected to a BPX 8600 series node
- An MGX 8250 connected to a BPX 8600 series node
- An IGX node connected to a BPX 8600 series node, which serves as a hub for the IGX/AF
- An IGX node connected to an IGX routing node, which serves as a hub for the IGX/AF

Each MGX 8250 or MGX 8220 feeder has one trunk that connects to the BPX 8600 series or IGX node serving as an access hub. A BPX 8600 series hub can support up to 16 T3 trunks to the interface shelves. An IGX hub can support up to four trunks to the interface shelves.

Before it can carry traffic, the trunk on an interface shelf must be upped (using **uptrk**) on both the interface shelf and the hub node and added to the network (using **addshelf**). Also, a trunk must be free of major alarms before you can add it using the **addshelf** command. (See Table C-5.)

Table C-5 Addshelf–Interface Shelf Parameters

Parameter	Description
slot.port (trunk)	slot.port Specifies the slot and port number of the trunk.
shelf type	I or A or P or V or X On a BPX 8600 series node, shelf type specifies the type of interface shelf when you execute **addshelf**. The choices are I for IGX/AF, A for the MGX 8220, P for EPS (Extended Services Processor, a type of Adjunct Processor Shelf), V for VSI, or X for the MGX 8250 node. On an IGX hub, only the IGX/AF is possible, so *shelf type* does not appear.
vpi vci	Specifies the VPI and VCI (Annex G VPI and VCI used). For the MGX 8220 only, the valid range for VPI is 5–14 and for VCI is 16–271.

Example for Interface Shelves

Add an MGX 8220 at trunk 11.1 After you add the shelf, the screen displays a confirmation message and the name of the shelf. Add the MGX 8220 (may be referred to on screen as AXIS) as follows:

addshelf 11.1 a

The sample display shows the partial execution of a command with the prompt requesting that the I/F type be entered.

System Response

```
nmsbpx23       TN    SuperUser       BPX 15    9.1   Apr. 4 1998 13:28 PST

                        BPX Interface Shelf Information

Trunk    Name      Type      Alarm
 1.3     AXIS240   AXIS      OK
 11.2    A242      AXIS      OK




This Command: addshelf 11.1

Enter Interface Shelf Type:  I (IGX/AF), A (AXIS), P (APS), V (VSI), X (PAR)

Next Command:
```

Example for Adding an MGX 8250 PAR (Portable AutoRoute) Interface Shelf

Add an MGX 8250 at trunk 4.8. After you add the MGX 8250 shelf, the screen displays a confirmation message and the name of the shelf. Add the MGX 8250 (may be referred to on screen as PAR) as follows:

addshelf 4.8 x

The sample display shows that an MGX 8250 was added on trunk 4.8 as a Portable AutoRoute (PAR) type of interface shelf. (Adding an MGX 8250 shelf is similar to adding a LSC interface shelf.)

System Response

```
pswbpx3       TN    SuperUser       BPX 8600    9.1   June 6 1998 13:28 PST

                        BPX Interface Shelf Information

Trunk    Name      Type      Part Id    Ctrl Id    Alarm
 4.8     SIMFDR0   PAR          -           -      OK




This Command: addshelf 4.8 x

Enter Interface Shelf Type: A (MGX 8220), P (EPS), V (VSI), X (PAR), I (IGX/AF)

Next Command:
```

dspnode (LSC)

Displays a summary of the interface shelves.

The **dspnode** command can isolate the shelf where an alarm has originated. For example, when you execute **dspalms**, the display indicates the number of shelves with alarms but does not identify the shelves. Therefore, execute **dspnode** on the hub node to determine which interface shelf generated the alarm.

The first example shows a screen display with **dspnode** executed on a BPX 8600 series node. The second example shows a screen with **dspnode** executed on an IGX/AF. When executed on an IGX/AF, **dspnode** shows the name of the hub node and the trunk number. Note that to execute a command from an IGX/AF itself, you must either telnet to the shelf or use a control terminal attached to the shelf.

Full Name

Display Node

Syntax

dspnode

Related Commands

addshelf, **delshelf**, **dsptrk**

Attributes

Privilege	1–6
Jobs	No
Log	No
Node	BPX, IGX, IGX/AF
Lock	Yes

Example 1

dspnode

Description

Display information about the interface shelves (executed on the BPX 8600 series hub node).

System Response

```
sw53           TN    SuperUser       BPX 15    9.1 July 21 1998 15:09 GMT

                        BPX Interface Shelf Information

Trunk    Name      Type      Part ID   Ctrl ID   Alarm
 1.1     sw89      IGX/AF                        OK
 1.2     SW93AXIS  AXIS                          UNRCH
 1.3     SW77AXIS  AXIS                          MAJ
 3.1     sw92      LSC                           OK
 3.2     sw91      IGX/AF                        OK
 3.3     sw90      IGX/AF                        OK
 4.1     sw24      IGX/AF                        MIN
 4.3     sw25      IGX/AF                        MIN
 5.8     SIMFDR0   PAR          -          -     OK



Last Command: dspnode

Next Command:
```

Example 2

dspnode

Description

Display information about the trunk to the hub node (executed on an IGX/AF).

System Response

```
sw141          TN    SuperUser       IGX 16    9.1 Aug. 20 1998 07:23 PDT

                        Switching Shelf Information

Trunk    Name      Type      Alarm
   3     sw45      BPX       OK









Last Command: dspnode


Next Command:
```

dspnode

Displays a summary of the interface shelves.

The **dspnode** command can isolate the shelf where an alarm has originated. For example, when you execute **dspalms**, the display indicates the number of shelves with alarms but does not identify the shelves. Therefore, execute **dspnode** on the hub node to determine which interface shelf generated the alarm.

The first example shows a screen display with **dspnode** executed on a BPX node. The second example shows a screen with **dspnode** executed on an IGX/AF. When executed on an IGX/AF, **dspnode** shows the name of the hub node and the trunk number. Note that to execute a command from an IGX/AF itself, you must either telnet to the shelf or use a control terminal attached to the shelf.

You can also display the VSI controllers on a BPX node using **dspnode**.

Full Name

Display Node

Syntax

dspnode

Related Commands

addshelf, **delshelf**, **dsptrk**

Attributes

Privilege	1–6
Jobs	No
Log	No
Node	BPX, IGX, IGX/AF
Lock	Yes

Example 1

dspnode

Description

Display information about the interface shelves (executed on the BPX 8600 series hub node).

System Response

```
sw53           TN    SuperUser       BPX 15    9.1 July 21 1998 15:09 GMT

                        BPX Interface Shelf Information

Trunk    Name      Type      Alarm
 1.1     sw89      IGX/AF    OK
 1.2     SW93AXIS  AXIS      UNRCH
 1.3     SW77AXIS  AXIS      MAJ
 3.1     sw92      LSC       OK
 3.2     sw91      IGX/AF    OK
 3.3     sw90      IGX/AF    OK
 4.1     sw24      IGX/AF    MIN
 4.3     sw25      IGX/AF    MIN



Last Command: dspnode


Next Command:
```

Example 2

dspnode

Description

Display information about the trunk to the hub node (executed on an IGX/AF).

System Response

```
sw141          TN    SuperUser       IGX 16    9.1 Aug. 20 1998 07:23 PDT

                        Switching Shelf Information

Trunk    Name      Type      Alarm
   3     sw45      BPX       OK









Last Command: dspnode


Next Command:
```

dsptrks

Displays basic trunk information for all trunks on a node. This command applies to both physical only and virtual trunks. The displayed information consists of:

- Trunk number, including the virtual trunk number if applicable
- Line type (E1, T3, or OC-3, for example)
- Alarm status

In addition, for trunks that have been added to the network with the **addtrk** command, the information includes the node name and trunk number at the other end. Trunks that have a "–" in the Other End column have been upped with **uptrk** but not yet added on both ends with **addtrk**. For disabled trunks, the trunk numbers appear in reverse video on the screen.

Full Name

Display Trunks

Syntax

dsptrks

Related Commands

addtrk, deltrk, dntrk, uptrk

Attributes

Privilege	1–6
Jobs	No
Log	No
Node	IPX, IGX, BPX
Lock	No

Example 1

dsptrks

Description

Display information on the trunk configuration and alarm status for the trunks at a node. The trunk numbers with three places represent virtual trunks.

System Response

```
sw53           TN    SuperUser       BPX 15    9.1    Sep. 24 1998 23:03 GMT

TRK  Type   Current Line Alarm Status             Other End
 1.1 T3Clear - OK                               sw89(IGX/AF)
 1.2 T3Clear - OK                               -
 1.3 T3Clear - OK                               -
 2.1.1OC3Clear - OK                               -
 3.1 T3Clear - OK                               sw92(IGX/AF)
 3.2 T3Clear - OK                               sw91(IGX/AF)
 3.3 T3Clear - OK                               sw90(IGX/AF)
 4.1 T3Clear - OK                               sw24(IGX/AF)
 4.2 T3Clear - OK                               swstorm/1.1
 4.3 T3Clear - OK                               sw25(IGX/AF)
13.1 T3(E3)Clear - OK                               -
13.2.1T3 Clear - OK                               -
13.2.2T3Clear - OK                               -
13.2.3T3Clear - OK                               -


Last Command: dsptrks


Next Command:
```

Example 1

dsptrks

Description

Display information on the trunk configuration and alarm status for the trunks at a node. The trunk numbers with three places represent virtual trunks.

System Response

```
sw53           TN    SuperUser       BPX 15    9.1    Sep. 24 1998 23:03 GMT

TRK  Type   Current Line Alarm Status             Other End
 2.1 T3Clear - OK                               pswbpx1/1.2
 4.8 T3Clear - OK                               SIMFDR0 (PAR)




Last Command: dsptrks


Next Command:
```

Numerics

12IN1
  Smart Serial Interface **2-5**
19-inch rack **4-2**
1 to 1 redundancy **4-28**
23-inch rack **4-2**

A

AAL5 **6-20**
AC Power
  checking status **4-62**
  circuit breakers **3-3**
AC power plugs **3-4**
AC power supply installation **4-18, 4-19**
AC power supply removal **4-6**
AC power tray installation **4-8**
addaimgrp **6-14**
addlink **6-46, 6-50**
addred **6-46, 6-51, 6-52**
air intake module installation **4-9**
alarm outputs, PXM-UI **4-32**
alarm reporting
  FRSM card **6-37**
APS
  B version SONET cards **4-30, 6-8**
ATM Inverse Multiplexing, see IMA and AUSM/B **6-12**
ATM IP address **5-2, 5-8**
ATM UNI Service Module
  MGX-AUSM/B-8E1 **2-4**
  MGX-AUSM/B-8T1 **2-4**
ATM UNI Service Module, see AUSM/B-8T1E1 **4-36**
audience, for this document **xix**
AUSM
  1 to N redundancy **4-37**
  redundancy **6-12**
AUSM/B
  as a clock source **6-12**
  feature list, eight-port version **6-12**
  IMA **6-12**
AUSM/B-8T1E1
  list of applications **4-36**
  list of back cards **4-37**
  list of features **4-37**
  redundancy support **4-37**
Automatic Protection Switching, see APS **6-5**
AX-CESM-8E1 **4-55, 6-42**
  Circuit Emulation Service Module **2-5**
AX-CESM-8T1 **4-55, 6-42**
  circuit emulation Service Module **2-4**
AX-FRMS-8T1c
  eight T1 lines **2-4**
AX-FRSM-8E1 **6-1, 6-21, 6-24, 6-29, 6-30, 6-32, 6-33**
  Frame Service Module **2-4**
AX-FRSM-8E1c
  E1 channelized **2-4**
AX-FRSM-8T1 **6-1, 6-21, 6-24, 6-29, 6-30, 6-32, 6-33, 6-49**
  Frame Service Module **2-4**

B

back card
  PXM-UI **2-3**
back card installation **4-27**
back card removal instructions **4-6**

BERT **6-22, 6-52**
for AUSM **6-12, 6-43**
initiated on PXM **6-5**
MGX-CESM-T3 or MGX-CESM-E3 **6-42**
MGX-FRSM-2T3E3 **6-37**
bit error rate test, see BERT **6-52**
Bit Error Rate Testing **6-6**
BNC-2E3 back card
faceplate **4-36, 4-42**
BNC-2T3 back card
faceplate **4-35**
bootChange command **5-3, 5-4**
Broadband Network Module
MGX-BNC-2E3 **2-4**
MGX-BNC-2T3 **2-4**
MGX-MMF-4-155 **2-4**
bulk distribution **4-60**

C

cable management
fiber optic and copper **4-10**
installation **4-10**
routing fiber and copper cables **4-61**
cabling
AC power **B-8**
clock **B-8**
control **B-8**
DC power **B-7**
E1 **B-2**
external alarm **B-11**
T1 **B-2**
Cabling-Appendix A
card cage installation **4-9**
caution
symbol, defined **xxii**
Cellbus
doubling the clock rate **5-9**
high speed **3-2**
Cell Loss Priority **6-26**
cell loss priority **6-25**
CESM
adding and modifying connections **6-40, 6-46**
AX-CESM-8E1 **4-55, 6-42**
AX-CESM-8T1 **4-55, 6-42**
bulk distribution **6-46**
configuring the card,lines, and ports **6-39, 6-45**
front and back cards **4-55**
LED indicators, 8-port **4-56**
redundancy support **4-55**
specifying redundancy **6-46**
structured data transfer **6-43**
unstructured data transfer **6-43**
unstructured data transfer, T3 or E3 **6-38**
CIR
FRSM cards **6-33**
Circuit Emulation Service Module **6-42**
AX-CESM-8E1 **2-5**
AX-CESM-8T1 **2-4**
Circuit Emulation Service Module, see CESM **4-55**
Circuit Emulation Service Module-T3E3, see MGX-CESM-T3 or MGX-CESM-E3 **6-37**
Cisco cabinet
ground attachments **3-12**
CiscoView application
IP address **5-2**
Cisco WAN Manager application
IP address **5-2**
clearance around MGX 8250 enclosure **3-2**
CLI commands
bootChange **5-3**
cnfchanmap **6-25**
cnfifip **5-8**
cnfname **5-8**
cnfstatsmgr **5-8**
cnftime **5-8**
cnftmzn **5-8**
dspcds **5-7**

dspifip **5-7**
dsppwr **4-62**
reboot **5-4**
clock
sources **6-5**
types **6-5**
closed rack
site preparation **3-1**
cnfbctype **6-8**
cnfcbclk **5-9**
cnfchanmap command **6-25**
cnfifip command **5-8**
cnfname **5-8**
cnfport **6-31**
cnfstatsmgr **5-8**
cnfswfunc command **5-9**
cnftime **5-8**
cnftmzn **5-8**
cnftmzngmt **5-8**
cnfupcabr **6-16**
cnfupccbr **6-16**
cnfupcvbr **6-16**
commands
cnfcbclk **5-9**
committed information rate, see CIR **6-33**
Congestion Indication **6-27**
congestion indication, FRSM **6-25**
connections
slave end description, remoteConnId **6-10**
connections, master end **6-10**
console port, see control port **5-2**
control port **5-2**
conventions, documentation **xxi**
core card **2-3, 4-26**

D

DC-PEM
DC Power Entry Module **4-8**
installation **4-8**
DC Power
circuit breakers **3-3**
documentation
conventions **xxi**
objectives **xix**
organization **xx**
dspcds commands **5-7**
dspifip commands **5-7**
dsppwr command **4-62**

E

EMI and EMC integrity **3-6**
enclosure installation, requirements and helpful information **4-3**
environment
heat, humidity **3-2**
external clock connections **4-31**
external clock connections, through PXM-UI **4-30**

F

Fan Tray
fan power connections **4-11**
fan tray
installation **4-10**
optional booster fan tray **4-9**
FEAC channel **A-12**
feeder, specifying the node as **5-9**
fiber optic cabling and copper cabling **4-10**
firmware dowload
runtime firmware **5-3**
firmware download
firmware release numbers **5-4**
outline of steps **5-3**
firmware downloading
CESM and FRSM examples **5-11**
service module versions **5-10**

firmware version **5-10**
frame relay connections **6-28**
Frame Service Module
  AX-FRSM-8E1 **2-4**
  AX-FRSM-8E1c **2-4**
  AX-FRSM-8T1 **2-4**
  AX-FRSM-8t1c **2-4**
  MGX-FRSM-2-CT3 **2-4**
  MGX-FRSM-2E3T3 **2-4**
  MGX-HS2/B **2-4**
Frame Service Module, see FRSM **4-42**
Frame Service Modules-Very High Speed **6-20**
front card installation **4-18, 4-19**
front card removal instructions **4-6**
FRSM
  alarms **6-37**
  ATM layer status management **6-25**
  cell loss priority, NIW **6-25**
  congestion indication **6-25**
  PVC status management **6-25**
  redundancy support **4-54**
  SIW **6-26**
  usable and recommended slots **4-42**
FRSM-HS 1/B
  12IN1 Smart Serial Interface **2-5**
FRSM-VHS (very high speed)
  introduction **4-42**
  see MGX-FRSM-2CT3, MGX-FRSM-2T3E3, or MGX-FRSM-HS2 **4-42**
FRSM-VHS, basic descriptions **4-43**

G

gateway IP address **5-3**
ground attachments for Cisco cabinet **3-12**
grounding
  Cisco cabinets **3-12**
grounding conductors **3-4**
ground plane **3-6**

H

heat dissipation **3-2**
heat transfer to environment **A-3**
High Speed Frame Service Module **6-20**
hot standby **4-28, 4-55**

I

IMA **6-12**
inband ATM connections
  IP address assignment **5-2**
installation tools **4-2**
installing back cards **4-27**
installing MGX 8250 modules **4-8**
installing the front cards **4-27**
interworking
  network **6-24**
IP address
  Ethernet port **5-2**
  gateway for PXM **5-3**
  maintenance port **5-2**
  statistics manager **5-2**
IP addresses
  for PXM with no runtime firmware **5-3**

L

low profile system **4-1**

M

maintenance port **5-2**
management of MGX 8800 switches **2-5**
mastership **6-10**
maximum MGX 8250 switches in a rack **4-1**
MGX 8220
  cards **2-3**

overview **2-2**
MGX 8250
initial configuration tasks **5-1**
user-access for switch control **5-1**
MGX 8250 switch
initial configuration tasks **5-1**
MGX 8250 switch initial startup **4-62**
MGX 8800
management **2-5**
MGX-AUSM/B-8E1
ATM UNI Service Module **2-4**
MGX-AUSM/B-8T1
T1 ATM UNI Service Module **2-4**
MGX-FRSM-2CT3 **4-42**
1-to1 Y-cable redundancy **4-54**
hot standby **4-28**
MGX-FRSM-2T3E3 **4-42**
1-to1 Y-cable redundancy **4-54**
hot standby **4-28**
MGX-FRSM-HS2 **4-42**
1-to-1 Y-cable redundancy **4-54**
hot standby **4-28**
MGX-HS2/B
unchannelized HSSI lines **2-4**
MGX-SMFIR-1-622
Broadband Network Module **2-4**
MGX-SMFLR-1-622
SONET OC12/STM4 ATM interface **2-4**
MGX-SRM-3T3
BERT **4-60**
bulkdistribution **4-60**
MGX-SRM-3T3/B
faceplate **4-61**
list of capabilities **4-60**
number of cards required **4-60**
redundancy of **4-60**
required locations **4-60**
Service Resource Module **2-5**
mid-mount installation
attaching AC power tray **4-8**
removing AC power supplies **4-6**
side clearance **4-4**
thread-forming screws, need for **4-4**
modem port, see maintenance port **5-2**
mounting **3-2**
mounting rails **4-3**
mounting the MGX 8250 modules **4-3**

N

network interworking **6-24**
network synchronization
from AUSM/B line **6-12**

O

OAM loopback test **6-36**
on-line firmware, see runtime firmware **5-3**
open rack
site preparation **3-1**
overview of MGX 8220 **2-2**

P

PAR
resource partitioning on PXM **6-2**
physical lines
activation, PXM **6-5**
Portable AutoRoute, see PAR **6-2**
power receptacles **3-4**
power source wiring **3-2**
Processor Switching Module, see PXM **4-29**
put
command **5-4**
PXM
boot-mode firmware **5-3**
front card installation, warnings **4-29**

loading firmware **5-1**
primary and redundant slots **3-1**
specifying IP addresses **5-3**
PXM1
Processor Switching Module **2-3**
PXM1-UI
Processor Switch Module User Interface **2-4**
PXM-UI
alarm outputs **4-32**
external clock connections **4-30**
faceplate **4-30**
installation **4-29**
user-control and access ports **5-2**
PXM User Interface back card, see PXM-UI **4-29**

R

reboot
command **5-5**
reboot command **5-4**
receive direction, relative to switch **B-1**
redundancy
1 to N for AUSM T1 and E1 **6-12**
FRSM E1 mode **6-24**
FRSM T1 mode **6-24**
redundancy, card and cable installation **4-27**
redundancy back cards
R-RJ48-8E1 **6-42**
R-RJ48-8T1 **6-42**
remoteConnId **6-10**
removing back cards **4-6**
removing front cards **4-5**
reserved slot descriptions **3-1**
resource partitioning
definition **6-2**
RJ48-8E1 **6-42**
RJ48-8T1 **6-42**
RJ-48 connectors **B-6**
Route Processor Module
RPM **2-5**
routing fiber and copper cables **4-61**
RPM
Route Processor Module **2-5**
slot choices **3-1**
R-RJ48-8E1 **6-42**
R-RJ48-8T1 **6-42**
runtime firmware
image **5-5**
see firmware download **5-3**

S

safety
power and ground **3-3**
seismic mounting **3-3**
seismic stability plate **3-1, 3-9**
serial line interface protocol, see SLIP **5-2**
service interworking, SIW **6-26**
service modules, list of **2-3**
Service Resource Module
MGX-SRM-3T3/B **2-5**
Service Resource Module, see SRM-3T3 **4-37**
Service Resource Module-3T3, see SRM-3T3 **4-59**
setPXMPrimary
command **5-5**
site preparation
AC power **3-3**
co-locating nodes in a single rack **3-14**
electrostatic discharge, protection **3-3**
EMI and EMC integrity **3-6**
flooring **3-2**
ground attachments to cabinet **3-12**
ground plane **3-6**
installation tools **4-2**
power connections **3-1**
reserved slot descriptions **3-1**
seismic stability plate **3-1, 3-9**
space requirements **3-2**

wrist strap for electrostatic discharge **3-14**
SIW
FRSM **6-26**
Smart Serial Interface
FRSM-HS1/B 12IN1 **2-5**
SMF-155 uplink card
faceplate **4-34**
Y-cable redundancy **4-34**
SMFIR-1-622 uplink card
faceplate **4-33**
SMFLR-1-622 uplink card **4-32**
faceplate **4-32**
SNMP **5-2**
SONET
B version cards **4-30, 6-8**
OC12/STM4 ATM interface **2-4**
OC3/STM1 AMT interface **2-4**
space requirements **3-2**
SRM
reserved slots **3-1**
SRM-3T3
1 to N redundancy for AUSM **4-37**
bulk distribution **4-60**
de-multiplexing to T1 channels **4-60**
installation requirements **4-60**
requirement for BNC-3T3 back card **4-60**
stability plate **3-3**
standards based conversion **2-3**
starting up an MGX 8250 switch **4-62**
statistics manager **5-2**
StrataView Plus, now the WAN Manager tool **5-2**
structured data transfer **6-43**
system power installation **4-14**

T

T1
MGX-AUSM/B-8T1 **2-4**
T3
channelized frame relay lines **2-4**
telecommunications requirements **3-2**
Telnet support **5-2**
TFTP **5-2**
tftp
command **5-4**
traffic generation test **6-36**
Translation **6-27**
Translation and Transparent Modes **6-27**
transmit direction, relative to switch **B-1**

U

uninterruptible power source **3-4**
unstructured data transfer **6-43**
T3 or E3 CESM **6-38**
uplink **6-5**
uplink back cards for PXM **4-29**
UPS
Cisco recommendations **3-4**

V

very high speed Frame Service Module, see FRSM-VHS **4-42**

W

warning
definition **xxii**
grounding equipment **1-10**
jewelry removal **1-6**
laser beam **1-13**
lightning activity **1-5**
power disconnection **1-10**
power supply **1-7**
power supply, disconnection **1-8**
product disposal **1-4**
weight **3-2**

wiring, to AC or DC power source **3-2**
wrist strap **3-14**

Y

Y-cable
  CESM T3 or E3 **6-38**
Y-cabling, where used **4-28**